DRAWING NUMBER		BS 308 THIRD ANGLE PROJECTION
604878-ENV	A3	

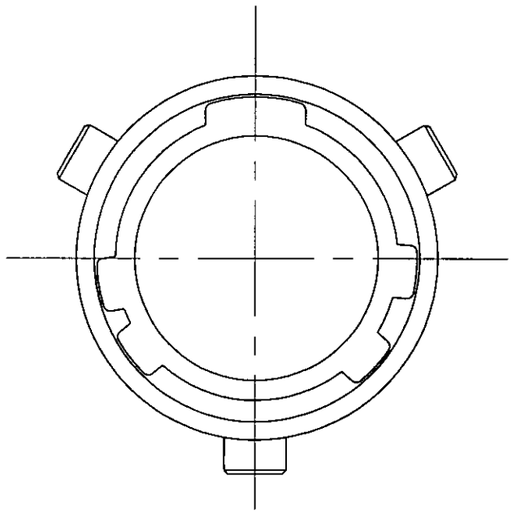

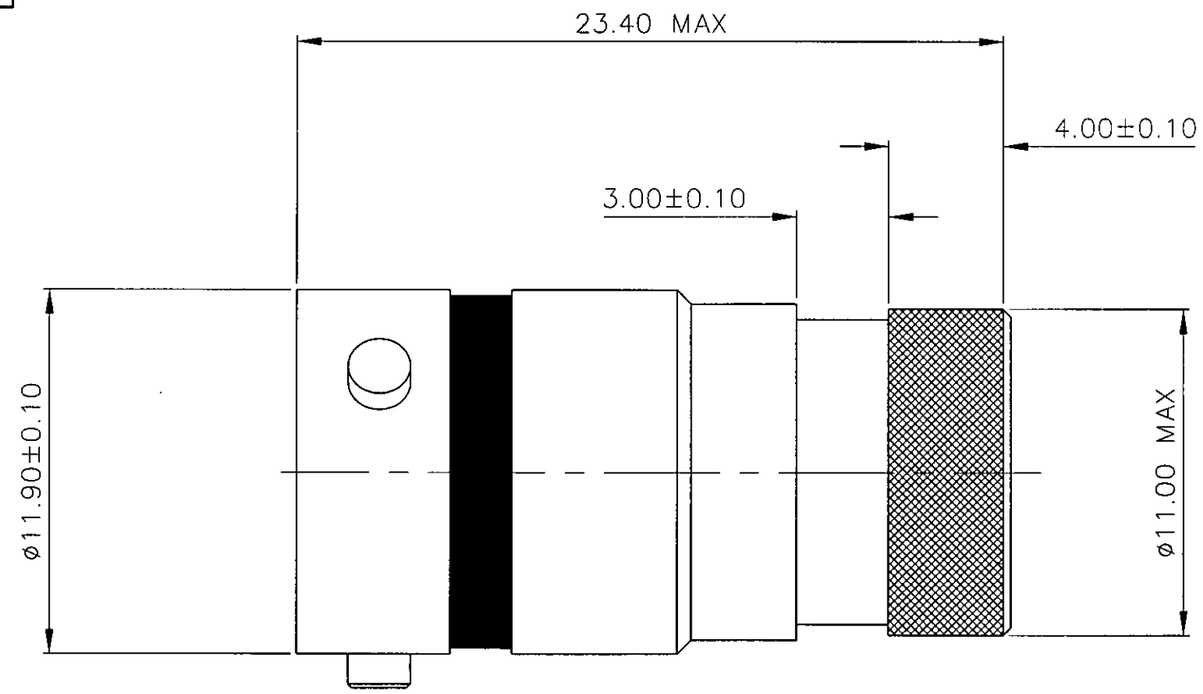

NOTES:-
PART NUMBER AND BATCH NUMBER BREAKDOWN :-

DEUTSCH AS107-35PN RP654321

- RP654321 — BATCH NUMBER
- P — KEY ORIENTATION
- P — CONTACT TYPE (PIN=P, SOCKET=S)
- 35 — PLANFORM
- 107 — SHELL SIZE
- 7 — SHELL STYLE
- AS — SERIES PREFIX

ISSUE	CHANGE NOTE	DRAWN	CHECKED	APP. ENG.	APP. B.U.	DATE
A	044017	J.R.E	NOK	KJF		06/01/04

MATERIAL

HEAT TREATMENT & FINISH

APP. I.E.D.

© THE COPYRIGHT OF THIS DRAWING IS RESERVED BY DEUTSCH LTD. IT IS ISSUED ON CONDITION THAT IT IS NOT COPIED, REPRODUCED OR DISCLOSED TO A THIRD PARTY EITHER WHOLLY OR IN PART WITHOUT THE CONSENT IN WRITING OF DEUTSCH LTD.

SCALE 5:1

GENERAL TOLERANCES UNLESS OTHERWISE STATED.
±0.4mm ON WHOLE NUMBERS
±0.2mm ON ONE PLACE DECIMALS
±0.1mm ON TWO PLACE DECIMALS
±1/2° ON ANGLES
±0.05mm ON DRILLED HOLES
ALL DIAMETERS ⊚ ø0.10
REMOVE ALL BURRS AND SHARP EDGES 0.1 MAX. UNLESS OTHERWISE STATED.

DIMS. IN MILLIMETRES

DEUTSCH LTD
(R) ST LEONARDS-ON-SEA, EAST SUSSEX, TN38 9RF, TEL:(01424)852721

TITLE INLINE RECEPT TYPE 1 AS SIZE 7

DRAWING NUMBER 604878-ENV