REVISIONS				
ZONE	LTR	DESCRIPTION	DATE	APPROVED
—	—	RELEASED PER E.C.N. T- [illegible]	[illegible]	[illegible]
—	A	REVISED PER E.C.N. T-8367	[illegible]	[illegible]
—	B	REVISED PER ECN T-13072	87/10	[illegible]

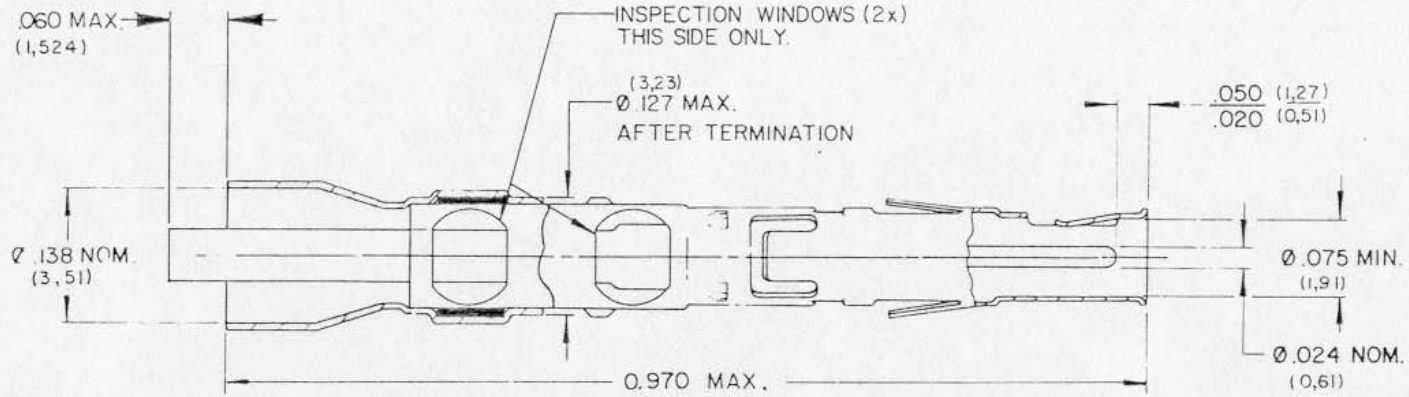

CONTACT CHARACTERISTICS

MATERIALS:

A. CONTACTS: INNER - COPPER ALLOY, GOLD PLATED PER MIL-G-45204 OVER NICKEL UNDERPLATE

OUTER - COPPER ALLOY, SELECTIVELY GOLD PLATED PER MIL-G-45204 AND TIN PLATED PER MIL-T-10727 OVER NICKEL UNDERPLATE.

B. SOLDER: SN 63 PER QQ-S-571

C. TUBING: POLYVINYLIDENE FLUORIDE

D. DIELECTRIC: FLUOROFOLYMER

PERFORMANCE:

A. MAXIMUM OPERATING TEMPERATURE: 125° C.

B. HIGH POTENTIAL, RATED, SEA LEVEL: 600 VRMS AT 60 Hz.

C. CURRENT RATING: 3 AMPS MAX.

D. INSULATION RESISTANCE: 5 GIGAOHMS MIN.

E. CONTACT RESISTANCE: 12 MILLIOHMS MAX.

F. CONTACT RETENTION IN CONNECTOR: 18 LBS. (8,1 KILOGRAMS) MIN.

G. ENGAGEMENT FORCE, OUTER SOCKET: 10.0 OZ. (280 GRAMS) MAX. [.074 (1,880) DIA. PIN.]

SEPARATION FORCE, OUTER SOCKET: 0.75 OZ. (21 GRAMS) MIN. [.072 (1,829) DIA. PIN.]

NOTES

1. THIS CONTACT IS DESIGNED TO TERMINATE TO WIRES 30 THRU 24 AWG. MAX. INSULATION .054 (1,37) DIA. OTHER APPLICATIONS SHOULD BE SUBMITTED TO RAYCHEM FOR EVALUATION.
2. FOR TERMINATION PROCEDURE SEE ES 61414
3. MATING CONTACT (FOR SIMILAR WIRE): D-602-0288.
4. THIS CONTACT IS DESIGNED TO BE USED IN THE CAVITY DETAILED BELOW.

CAVITY DETAIL

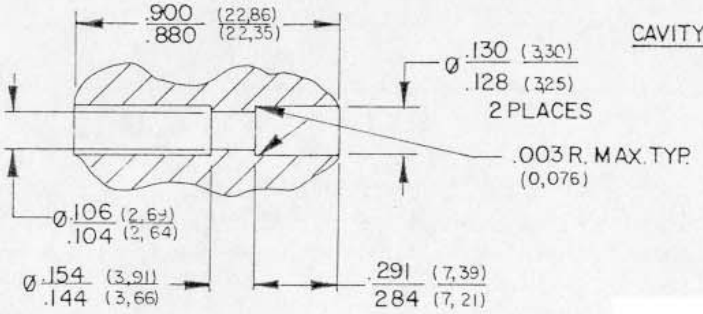

SPECIFICATION CONTROL DRAWING

DRAWN	terry	2-26-86
[illegible]	[illegible]	[illegible]
[illegible]	[illegible]	[illegible]
[illegible]	[illegible]	[illegible]
[illegible]	[illegible]	[illegible]

tyco Electronics — Tyco Electronics Corporation, 300 Constitutional Drive, Menlo Park, CA 94025 USA — Raychem

SUBMINIATURE CONTACT, SOCKET TWISTED PAIR

C — D-602-0289

If this document is printed it becomes uncontrolled.
Check for the latest revision.