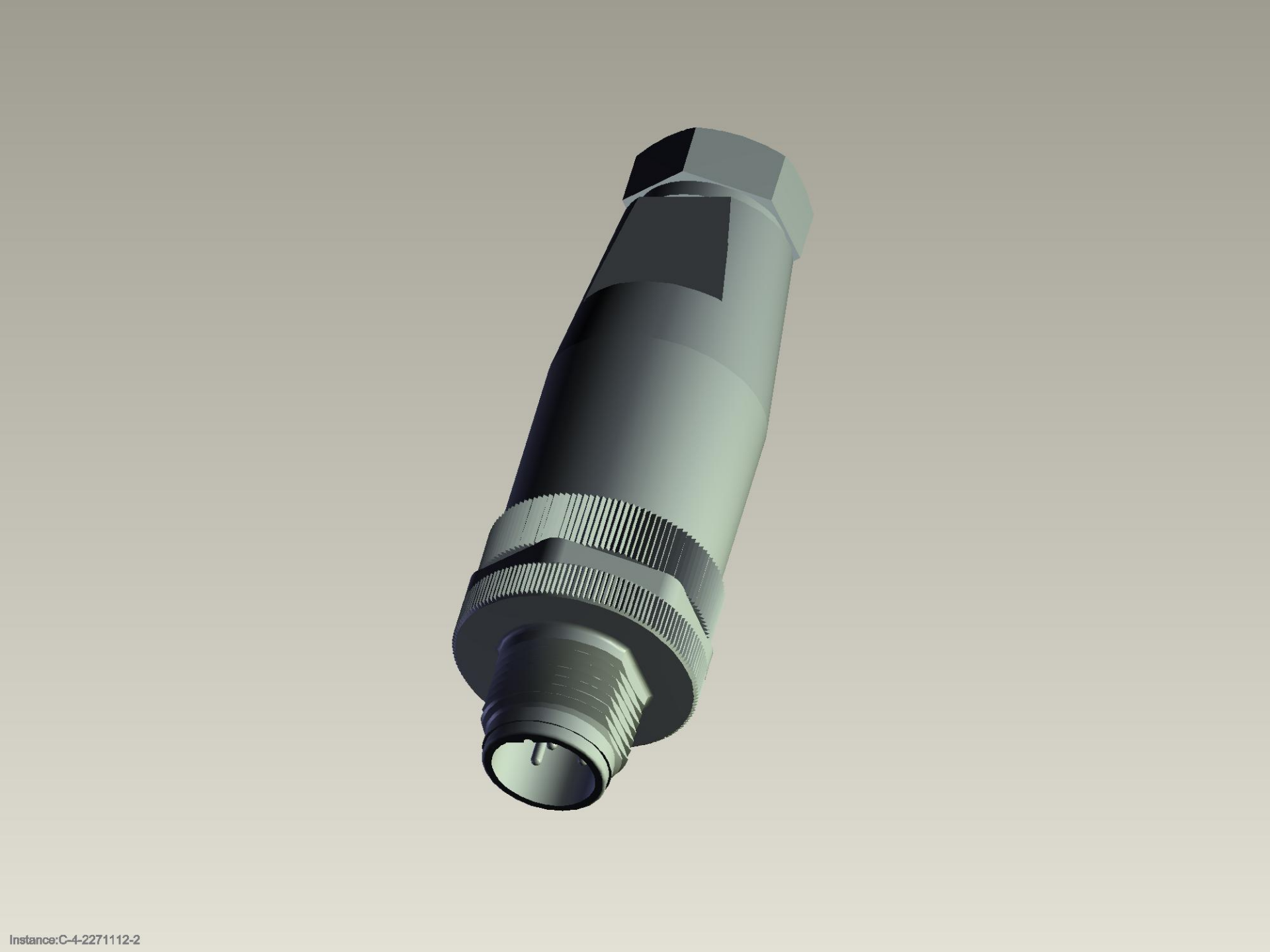

Instance:C-4-2271112-2