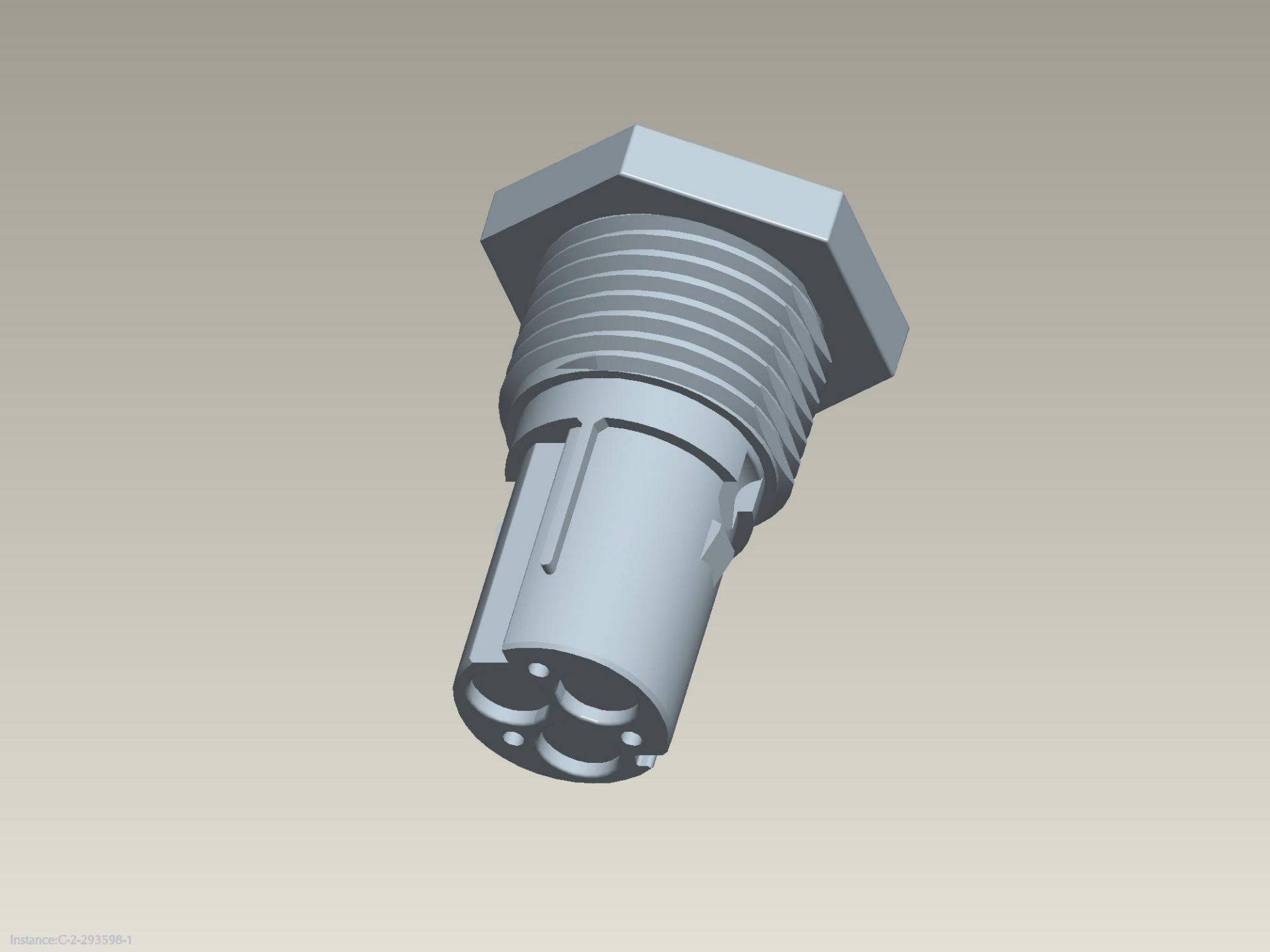
Instance:C-2-293598-1