WRAPTER

ARMOUR RODS

CATALOGUE NUMBER: NCA1785-1870
SUITS CONDUCTOR

STRANDING	COND. TYPE	DIAMETER	FITTING LAY
37/0.103	COPPER	18.31	RIGHT HAND

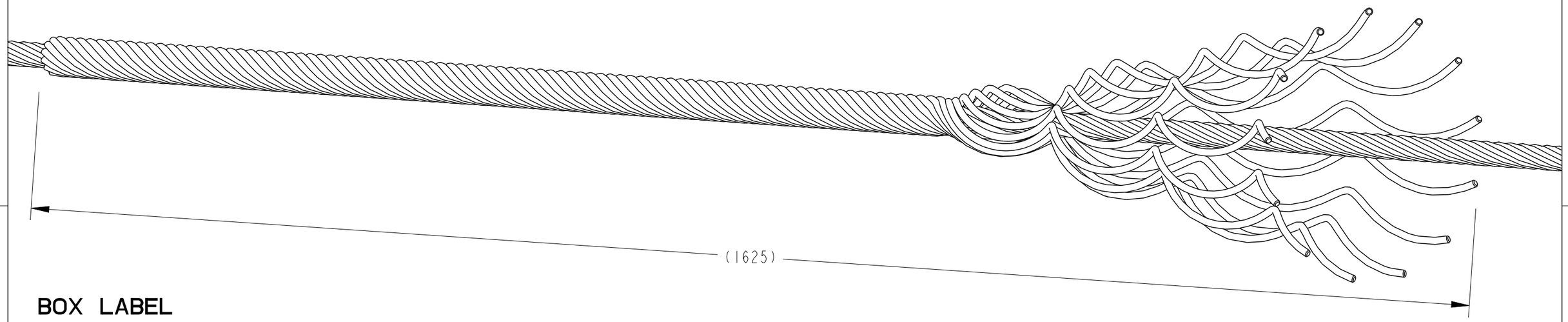

BOX LABEL

WRAPTER TE connectivity

P/N: NCA1785-1870
ID:
DESCRIPTION:
NON-TENSION HARD DRAWN COPPER ARMOUR RODS
37/0.103 COPPER

RANGE: 17.85 - 18.70
COLOUR-CODE: BLUE
QTY: 5 WEIGHT: ----- BATCH: ------

PRODUCT LABEL

WRAPTER TE connectivity

NCA1785-1870
37/0.103 COPPER

WEIGHT: 3.18kg
BATCH NO: ----------
MONTH/YEAR: ----------

TECHNICAL SPECIFICATIONS;

CATALOGUE NUMBER: NCA1785-1870
DESCRIPTION: NON-TENSION HARD DRAWN COPPER ARMOUR RODS
MATERIAL: HARD DRAWN COPPER WIRE
NUMBER OF RODS: 13
ROD DIAMETER: 4.47mm
OVERAL LENGTH: 1625mm
END FINISH: CHAMFERED
FITTING LAY DIRECTION: RIGHT HAND
COLOUR CODED: BLUE
RODS ARE LABELED, BUNDLED IN A SET AND TAPED AT BOTH ENDS.

POS	REV	REVISION RECORD	DATE	DWN	APVD
—	1	NEW RELEASE	06-05-2013	RN	AT

LOC
DIST

IMPLIED NOTES
BURRS AND SHARP EDGES REMOVED
SCREW THREADS ARE TO AS 1275
DO NOT WORK TO DIMS MARKED REF
SURFACE FINISH 6.3 U.N.O.
DIMS ARE IN mm. DO NOT SCALE

IMPLIED TOLERANCES
HOLE DIA AND LOCATIONS.±0.5mm.
DIMENSIONS UP TO 30mm..±1.5mm.
DIMENSIONS OVER 30mm...±5%.
UP TO A MAX OF.....±5mm.
ANGULAR DIMENSIONS.....±5°.

TCPN: -
PART Alias UTX/DUL: NCA1785-1870
Cat No: NCA1785-1870

MATERIAL DESC: HARD DRAWN COPPER WIRE
MATERIAL NO: -
MATL SPEC/STD/DRG NO: -
PROCESS SPEC HEAT TREAT/PLATING NO:

TITLE: NON-TENSION HARD DRAWN COPPER ARMOUR RODS (NCA) FITTING
COND.RANGE: Ø17.85-Ø18.70 37/0.103 COPPER

DRAWN: RN
DATE: 06-05-2013
CHECKED: MN
APPROVED: AT

TE Connectivity
2/3 Corella Close
Berkeley Vale NSW 2261 Australia

SIZE: A3
PROJECTION: 3RD ANGLE
SCALE: NTS
DRAWING NO: NCA1785-1870-C
SHEET 1 OF 1
REV 1

Format: generic_ma3_au_rl.frm
Template: tec_generic_a3_metric_au_rl.drw
Dwg No from Pt Mod Fam Tbl: >AUXXXXX

DRAWING NO NCA1785-1870-C

THIS DRAWING IS A CONTROLLED DOCUMENT

THIS INFORMATION IS CONFIDENTIAL AND PROPRIETARY TO TE CONNECTIVITY CORPORATION AND ITS WORLDWIDE SUBSIDIARIES AND AFFILIATES. IT MAY NOT BE DISCLOSED TO ANYONE, OTHER THAN TE CONNECTIVITY PERSONNEL, WITHOUT WRITTEN AUTHORIZATION FROM TE CONNECTIVITY CORPORATION, AUSTRALIA.