THIS DRAWING IS A CONTROLLED DOCUMENT
DRAWING NO AU34604

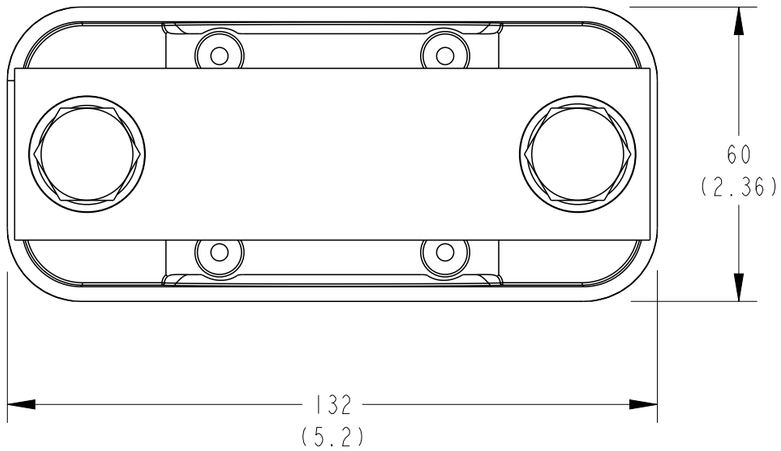

PART NO.	CATALOGUE NO.
BM9038-000	CC50-60-FM-M12

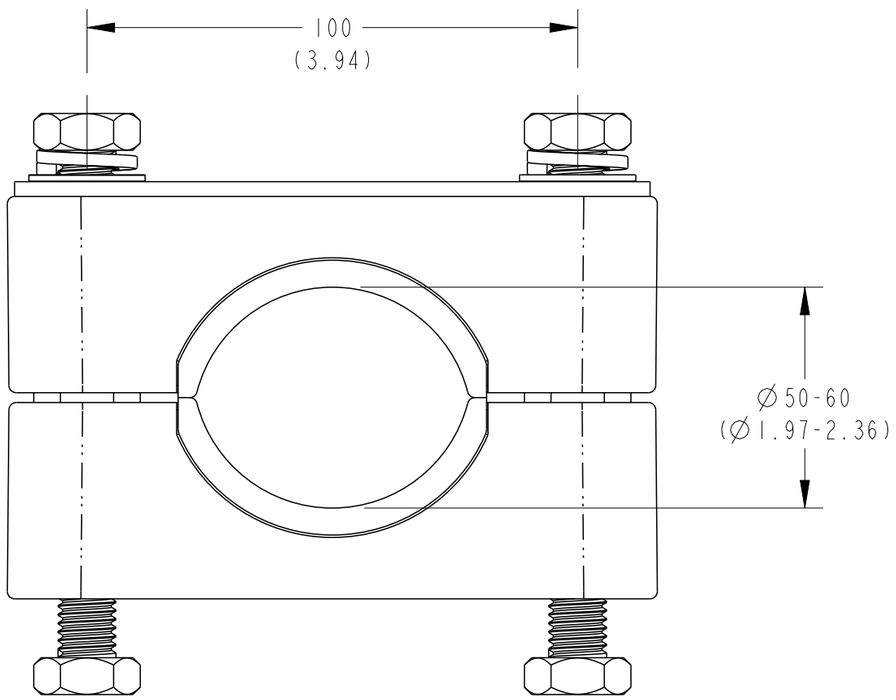

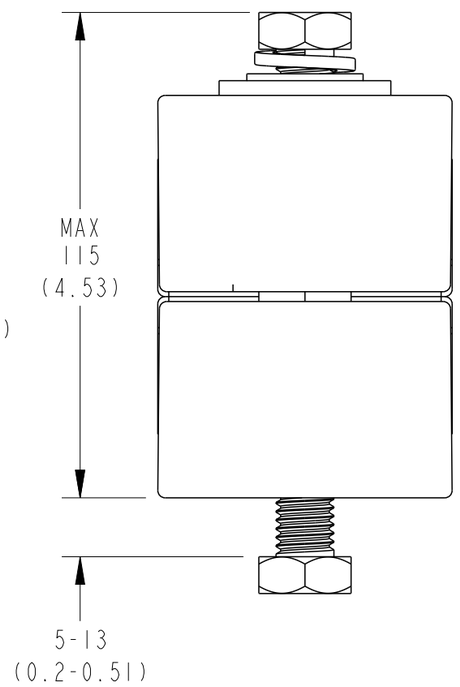

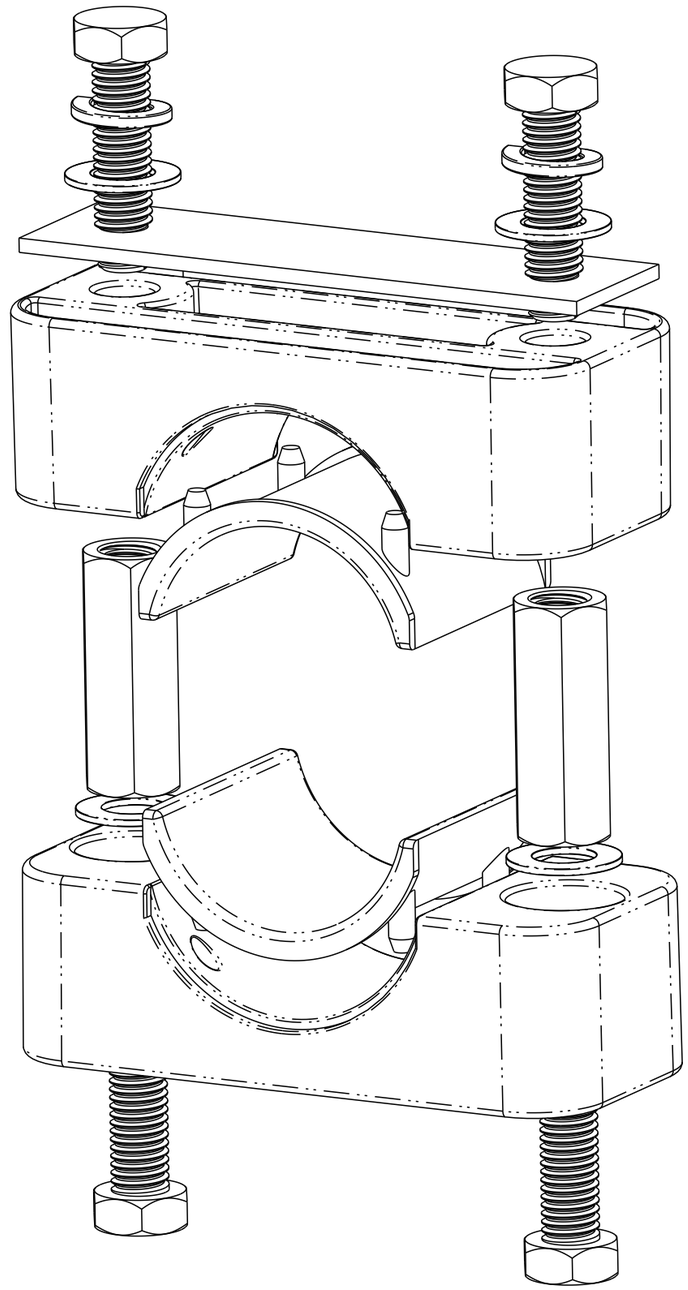

THIS INFORMATION IS CONFIDENTIAL AND PROPRIETARY TO TE CONNECTIVITY CORPORATION AND ITS WORLDWIDE SUBSIDIARIES AND AFFILIATES. IT MAY NOT BE DISCLOSED TO ANYONE, OTHER THAN TE CONNECTIVITY PERSONNEL, WITHOUT WRITTEN AUTHORIZATION FROM TE CONNECTIVITY CORPORATION, AUSTRALIA.

POS	REV	REVISION RECORD	DATE	DWN	APVD
—	1	NEW RELEASE	14-09-2015	RN	AT

LOC
DIST

IMPLIED NOTES
BURRS AND SHARP EDGES REMOVED
SCREW THREADS ARE TO AS 1275
DO NOT WORK TO DIMS MARKED REF
SURFACE FINISH 6.3 U.N.O.
DIMS ARE IN mm. DO NOT SCALE

IMPLIED TOLERANCES
HOLE DIA AND LOCATIONS..±0.5mm
DIMENSIONS UP TO 30mm...±1.5mm
DIMENSIONS OVER 30mm...±5%
UP TO A MAX OF.....±5mm
ANGULAR DIMENSIONS.....±5°

TCPN BM9038-000
PART Alias UTX/DUL CC50-60-FM-M12
Cat No CC50-60-FM-M12

MATERIAL DESC -
MATERIAL NO -
MATL SPEC/STD/DRG NO -
PROCESS SPEC HEAT TREAT/PLATING NO

TITLE
CABLE CLEAT Ø50-60
FLAT MOUNT TYPE 5-13mm

DRAWN RN
DATE 14-09-2015
CHECKED RN
APPROVED AT

TE Connectivity
2/3 Corella Close
Berkeley Vale NSW 2261 Australia

SIZE A3
PROJECTION 3RD ANGLE
SCALE 4:5
DRAWING NO AU34604
SHEET 1 OF 1
REV 1

Format: generic_ma3_au_rl.frm
Template: tec_generic_a3_metric_au_rl.drw
Dwg No from Pt Mod Fam Tbl: AU34604