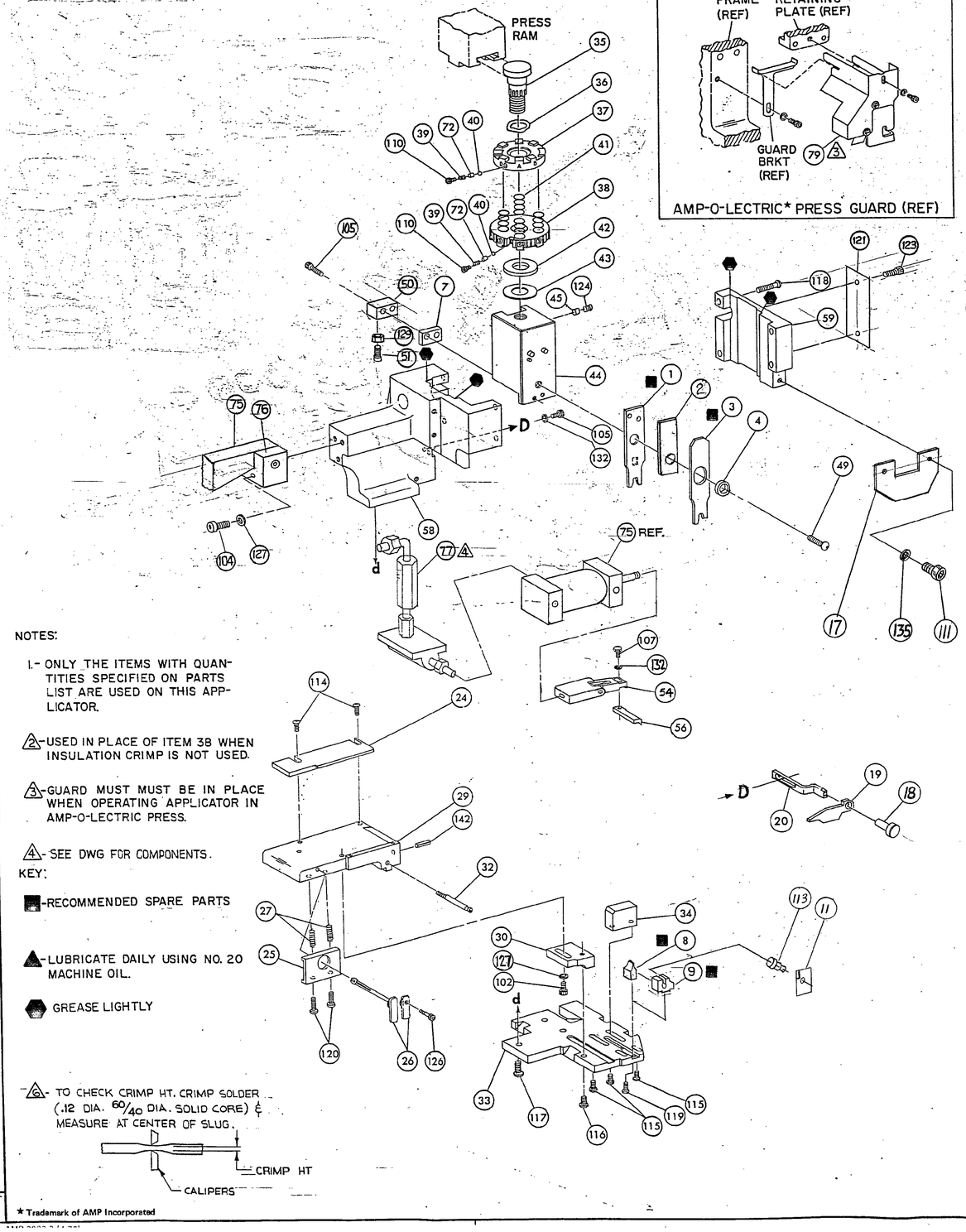
THIS DRAWING IS A CONTROLLED DOCUMENT FOR INTERNAL USE ONLY AND IS DISCLOSED TO YOU ON CONDITION THAT CONTROLLING ENGINEERING ORGANIZATION SHOULD BE CONTACTED FOR THE LATEST REVISION.

THE INFORMATION IS CONFIDENTIAL AND IS DISCLOSED TO YOU ON CONDITION THAT NO FURTHER DISCLOSURE IS MADE TO OTHERS THAN AMP PERSONNEL WITHOUT WRITTEN AUTHORIZATION FROM AMP INCORPORATED, HARRISBURG, PA.



NOTES:

1.- ONLY THE ITEMS WITH QUANTITIES SPECIFIED ON PARTS LIST ARE USED ON THIS APPLICATOR.

2- USED IN PLACE OF ITEM 38 WHEN INSULATION CRIMP IS NOT USED.

3- GUARD MUST MUST BE IN PLACE WHEN OPERATING APPLICATOR IN AMP-O-LECTRIC PRESS.

4- SEE DWG FOR COMPONENTS.

KEY:

■ -RECOMMENDED SPARE PARTS

▲ -LUBRICATE DAILY USING NO. 20 MACHINE OIL.

⬢ GREASE LIGHTLY

6- TO CHECK CRIMP HT. CRIMP SOLDER (.12 DIA. 60/40 DIA. SOLID CORE) & MEASURE AT CENTER OF SLUG.

DIST 66

* Trademark of AMP Incorporated

QTY	PART NO	DESCRIPTION	ITEM NO
			145
			144
			143
1	4-21028-0	PIN, SLOT SPR (.093 DIA X .75) STR G PLATE	142
			141
			140
			139
			138
			137
			136
1	21024-3	WASHER, LOCK #6 STRIPPER	135
			134
			133
2	21024-4	WASHER, LOCK (NO 8) STRIPPER, FINGER	132
			131
			130
1	21018-5	NUT, HEX MACH (6-32) HOLDDOWN	129
			128
3	21024-5	WASHER, LOCK (#10) FEED MT. BRKT ADJ BLOCK	127
1	22353-8	SCR, SHLD. (.187 DIA X .250 LG) DRAG LEVER	126
			125
1	21009-2	SCR, SKT SET (1/4-20 X .25) (LOC-WEL) RAM	124
2	21017-2	SCR, DRIVE #2 x .19	123
			122
1	461264-1	PLATE, IDENTIFICATION	121
2	3-21002-0	SCR, BUT HD SKT CAP (10-32 X .68) DRAG	120
2	22733-8	SCR, BUT HD SKT CAP (8-32 X .38) (LOC-WEL) ANVIL	119
4	2-21002-9	SCR, BUT HD SKT CAP (10-32 X .75) CAP	118
3	17177-1	SCR, BUT HD SKT CAP (1/4-20 X .62) HOUSING	117
1	2-21002-7	SCR, BUT HD SKT CAP (10-32 X .50) SG ADJ BLOCK	116
2	2-21002-2	SCR, BUT HD SKT CAP (8-32 X .50) SHEAR	115
2	1-21002-5	SCR, BUT HD SKT CAP (8-32 X.50) R STRIP GUIDE	114
2	1-21002-3	SCR, BUT HD SKT CAP 4-40 x.25	113
			112
2	9-21000-5	SCR SOC HD CAP 6-32 x .19 STRIPPER	111
2	23030-1	SCR, SKT HD CAP (6-32 X .25) (LOC-WEL) CP DISC	110
			109
			108
1	2-22603-0	SCR, HEX HD MACH (8-32 X .31) FEED FINGER	107
			106
3	2-21000-7	SCR, SKT HD CAP (8-32 X .50) STRIPPER& DEPRESSOR	105
2	3-21000-9	SCR, SKT HD CAP (10-32 X 1.00) AIR FEED ASS'Y	104
			103
1	3-21000-4	SCR, SKT HD CAP (10-32 X .38) SG ADJ BLOCK	102
			101
1	462992-7	GUARD ASS'Y ▲3	79
			78
1	692655-1	VALVE, ASS'Y — 692655-5 ▲4	77
1	459610-3	MOUNT FEED BRACKET	76
1	461065-1	AIR FEED ASS'Y ▲4	75
			74
			73
2	690603-1	SPRING, ASSIST	72
			71
			70
			69
			68
			67
			66
			65
			64
			63
			62
			61
			60

QTY	PART NO	DESCRIPTION	ITEM NO
1	816894-1	CAP, HOUSING	59
1	816896-1	HOUSING	58
			57
1	815213-1	PAWL, FEED	56
			55
1	461062-2	ASS'Y, FEED FINGER	54
			53
			52
1	811242-2	BUMPER, HOLDDOWN	51
1	690753-1	SPACER, TONKER	50
1	7-21002-9	BOLT, CRIMPER	49
			48
			47
			46
1	690191-1	PLUG, NYLON	45
1	455673-1	RAM	44
1	690125-1	WASHER, LAMINATED	43
1	690124-1	WASHER, RAM	42
6	1-22280-2	SPRING, INS. DISC	41
2	23241-6	BALL, STEEL	40
2	690170-1	SPRING, COMPRESSION	39
1	690142-1	DISC, INSULATION	38
1	808834-1	DISC, WIRE	37
1	22480-5	WASHER, SPRING	36
1	690212-1	POST, RAM	35
1	690786-2	SUPPORT, TERMINAL	34
1	815215-1	PLATE, BASE	33
1	690432-3	SCREW, ADJUSTMENT	32
			31
1	455689-1	BLOCK, STRIP GUIDE ADJ	30
1	815211-1	PLATE, STRIP GUIDE	29
			28
2	22281-9	SPRING, DRAG	27
1	815209-1	LEVER, DRAG RELEASE	26
1	815212-1	DRAG, STOCK	25
1	815210-1	GUIDE STRIP (REAR)	24
			23
			22
—	4-22284-9	SPRING, FEED RETURN	21
1	458950-1	ARM, STRIPPER	20
1	458949-1	WIRE, STOP	19
1	456567-1	SCREW, SHLD	18
1	816895-1	STRIPPER, TERMINAL	17
			16
			15
			14
			13
			12
1	122443-1	LOCATOR, STRIP	11
		HOLDER, SHEAR (FRONT)	10
1	815214-2	ANVIL, INSULATION ■	9
1	464291-1	ANVIL, WIRE ■	8
1	240641-9	SPACER, DEPRESSOR (REAR)	7
			6
			5
1	238009-9	SPACER, TUBULAR, INS CRIMPER	4
1	815216-2	CRIMPER, INSULATION ■	3
1	4-455888-6	SPACER, INSULATION CRIMPER	2
1	808830-2	CRIMPER, WIRE ■	1

QTY	PART NO	DESCRIPTION	ITEM NO

CRIMPING DATA ▲6

PAD LTR	CRIMP HEIGHT	WIRE SIZE	SOLDER DIA
A	.070	18	.12 DIA.
B	.065	20 OR 22	.12 DIA.
C	—	—	
D	—	—	

CRIMP	SIZE	TYPE	FEED	APPL INST
WIRE	.176	—	.785	SIMILAR A1 TO 8051
INSUL	.210	—		

WIRE RANGE 22 - 18 | INSULATION RANGE 135 MAX | PRESS NO 565435-5

REMARKS: AMP-O-LECTRIC AIR FEED

APPLICATOR WILL APPLY

520569
520570
520571
520608
520611
520614
520617
520620
520623
520629
520632
520635

REMARKS	NO	REV
	TO APPLY TERMINAL	
APPL USED ON MACHINE PART NO	MACH SERIAL NO	DISTRIBUTION
CUSTOMER NAME	APPL SERIAL NO	ORIGINAL
ADDRESS	PURCHASE ORDER	CUSTOMER COPY
CITY	ENG APP	FIELD ENG COPY

PF	LTR	REVISION RECORD	APP	DATE
	F	ECN 0150-9329-93	TK	5-93
	E	EC-0150-5014-93	RB	1-94
	D	REV 12 6785	JK	7-2-81
	C	ECN R-6642	DW/AL	5/6/86
	B	ECN R 6467	JEB	9-16-85
	A	REVISED	DEL	6/85

SET UP GAGE 10-1 456637-1
DR 10-11-84 APP 6/85 D.Oplinger H.Miller
CHK H.Miller REL 6/85
NAME MINIATURE QUICK CHANGE APPLICATOR
SIDE FEED (INSULATED RINGS & SPADES)
AMP INCORPORATED Harrisburg, Pa.
LOC A D NO 567177-2 REV F