© – TE Connectivity. All Rights Reserved.

REVISIONS					
P	LTR	DESCRIPTION	DATE	DWN	APVD
	B4	REVISED AS PER ECR-23-169440	05APR2023	JK	WH

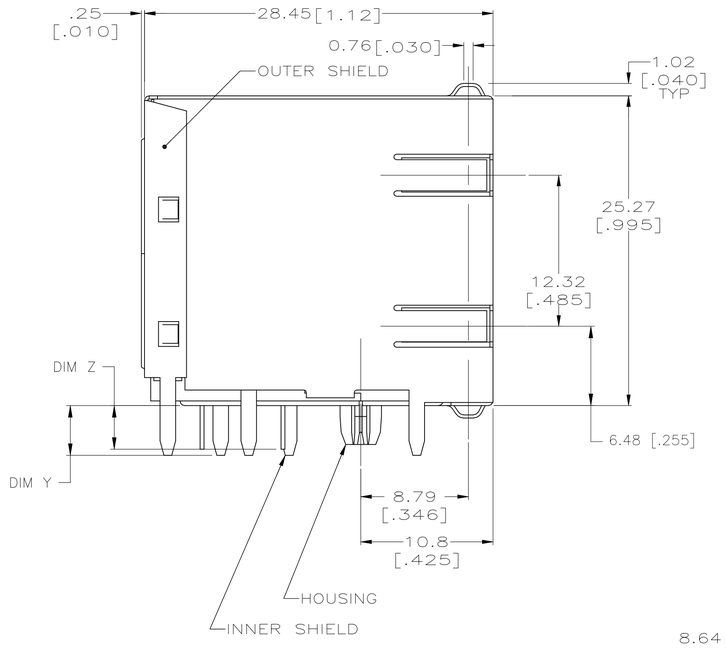

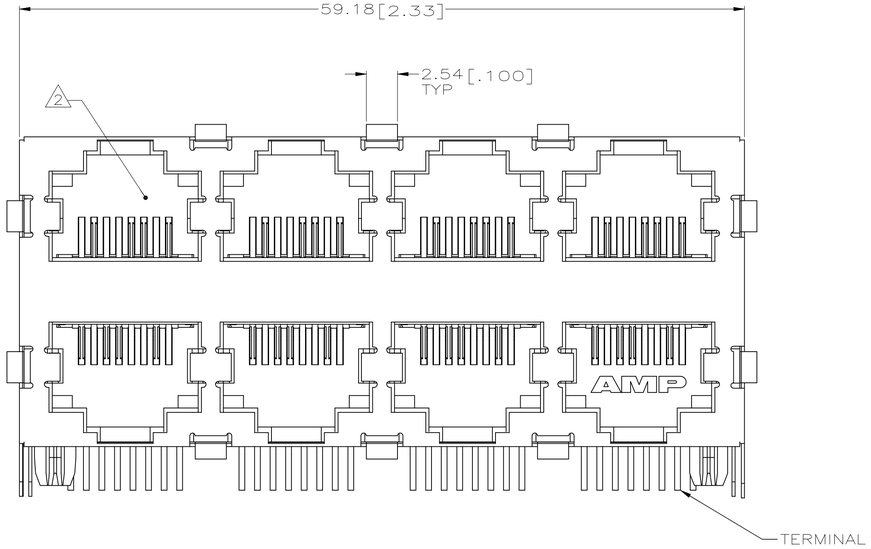

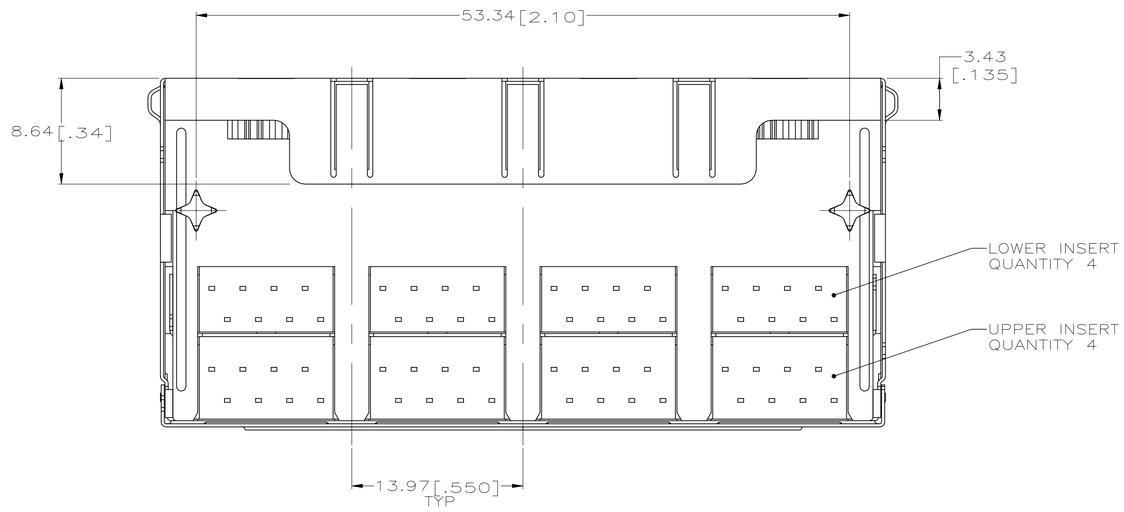

1. MATERIAL:
HOUSING – PCT POLYESTER, BLACK, UL94V–0.
OVERMOLDED TERMINAL ARRAY – PBT, BROWN.
TERMINALS – 0.33 [.013] THICK PHOS BRONZE PLATED WITH 1.27um [.000050] MIN THICK HARD GOLD IN LOCALIZED AREA AND 3.81um [.000150] MIN THICK MATTE TIN IN SOLDER AREA OVER 1.27um [.000050] MIN THICK NICKEL UNDERPLATE.
OUTER SHIELD AND INNER SHIELD – 0.25 [.010] THICK COPPER ALLOY PLATED WITH 1.27 um [.000050] MINMUM NICKEL AND 2.03 um[.000080] MINIMUM HOT TIN DIP ON PCB GROUND TABS.

2. JACK CAVITY CONFORMS TO FCC RULES AND REGULATIONS, PART 68 SUBPART F.

3. DATE CODE LOCATED ON REAR OF PART APPROXIMATELY AS SHOWN:
FIRST 2 DIGITS ARE LAST 2 DIGITS OF YEAR,
SECOND 2 DIGITS ARE MANUFACTURING WORK WEEK,
LAST DIGIT IS DAY OF WEEK, WITH SUNDAY = 1.

4. MATERIAL:
HOUSING – PCT POLYESTER, BLACK, UL94V–0.
OVERMOLDED TERMINAL ARRAY – PBT, BROWN.
TERMINALS – 0.33 [.013] THICK PHOS BRONZE PLATED WITH 1.27um [.000050] MIN THICK HARD GOLD IN LOCALIZED AREA AND 3.81um [.000150] MIN THICK MATTE TIN IN SOLDER AREA OVER 1.27um [.000050] MIN THICK NICKEL UNDERPLATE.
OUTER SHIELD AND INNER SHIELD – 0.25 [.010] THICK COPPER ALLOY
PLATED WITH 1.27 um [.000050] MINMUM NICKEL AND 2.03 um [.000080] MINIMUM HOT TIN DIP ON PCB GROUND TABS.

5. MATERIAL:
HOUSING – PCT POLYESTER, BLACK, UL94V–0.
OVERMOLDED TERMINAL ARRAY – PBT, BROWN.
TERMINALS – 0.33 [.013] THICK PHOS BRONZE PLATED WITH 0.381um [.000015] MIN THICK HARD GOLD IN LOCALIZED AREA AND 3.81um [.000150] MIN THICK MATTE TIN IN SOLDER AREA OVER 1.27um [.000050] MIN THICK NICKEL UNDERPLATE.
OUTER SHIELD AND INNER SHIELD – 0.25 [.010] THICK COPPER ALLOY PLATED WITH 1.27 um [.000050] MINMUM NICKEL AND 2.03 um [.000080] MINIMUM HOT TIN DIP ON PCB GROUND TABS.

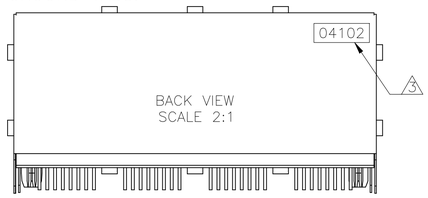

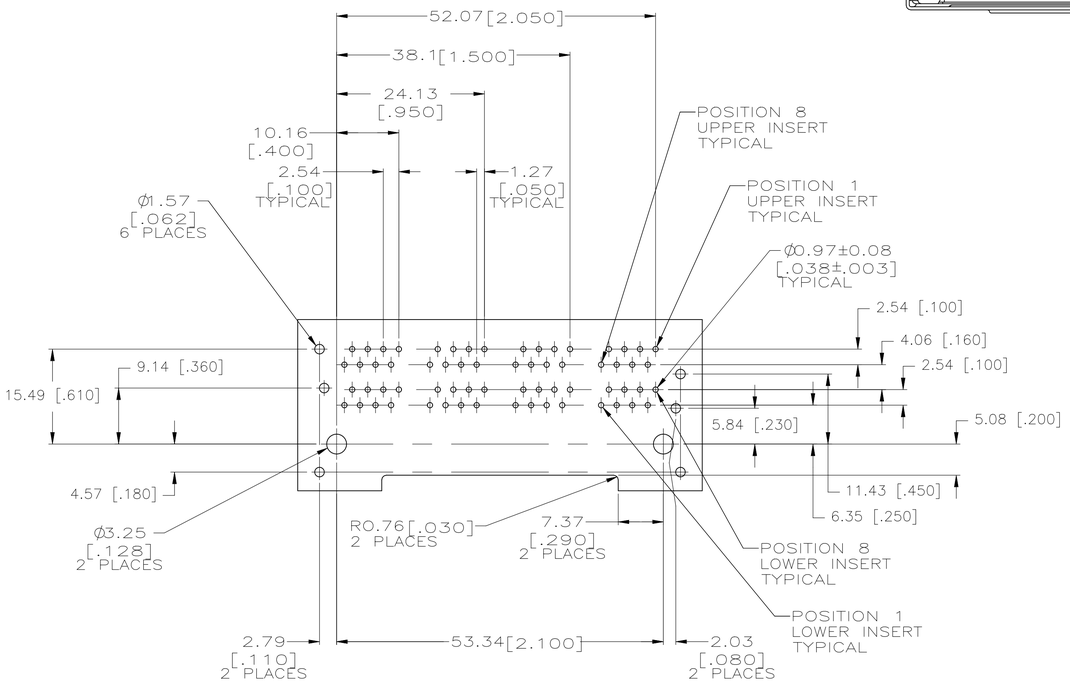

PC BOARD LAYOUT VIEWED FROM COMPONENT SIDE
SCALE 2:1

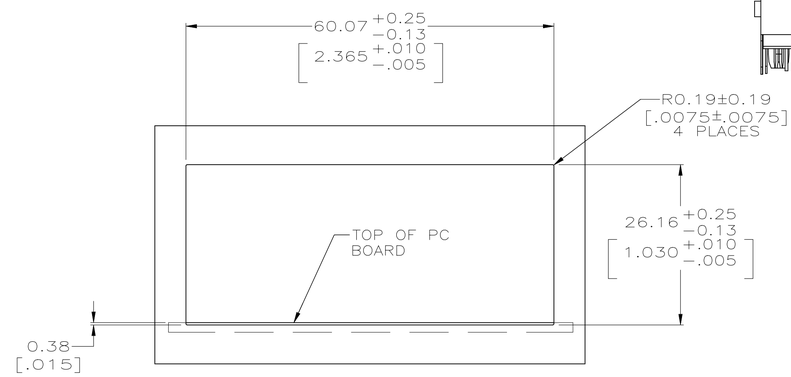

SUGGESTED PANEL CUTOUT DIMENSIONS
SCALE 2:1

5	3.56[.140]	4.06[.160]	5569262–2
1	3.05[.120]	4.06[.160]	1–5569262–1
4	3.56[.140]	4.06[.160]	5569262–1
REMARK	DIM. Z	DIM. Y	PART NUMBER

THIS DRAWING IS A CONTROLLED DOCUMENT.

DIMENSIONS: mm [INCHES]

TOLERANCES UNLESS OTHERWISE SPECIFIED:
0 PLC ± –
1 PLC ± –
2 PLC ± 0.25[.01]
3 PLC ± 0.13[.005]
4 PLC ± –
ANGLES ± –

MATERIAL: SEE NOTE 1
FINISH: SEE NOTE 1

DWN 17APR2005 T. SPRINKLE/L.A.MAYER
CHK 17APR2005 J.WESTMAN
APVD 17APR2005 S.FLICKINGER
PRODUCT SPEC 108–1163–2
APPLICATION SPEC 114–2048
WEIGHT 0.000000

TE Connectivity

NAME: STACKED MODULAR JACK ASSEMBLY, 2x4 PORT, 8 POSITION, SHIELDED, PANEL GROUND, CATEGORY 5

SIZE	CAGE CODE	DRAWING NO	RESTRICTED TO
A1	00779	C–5569262	–

CUSTOMER DRAWING | SCALE 4:1 | SHEET 1 OF 1 | REV B4

4805 (1/15)