© 2020 TE Connectivity. All Rights Reserved.

REVISIONS					
P	LTR	DESCRIPTION	DATE	DWN	APVD
	B	RESIN SUPPLIER CHANGE FOR THE HOUSING	26OCT2021	SCB	KJK

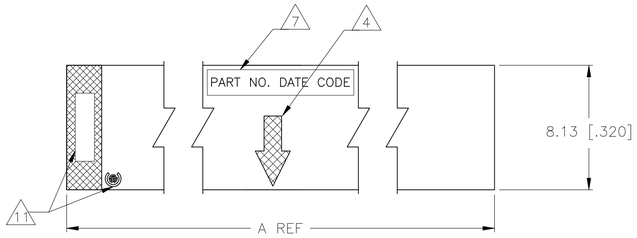

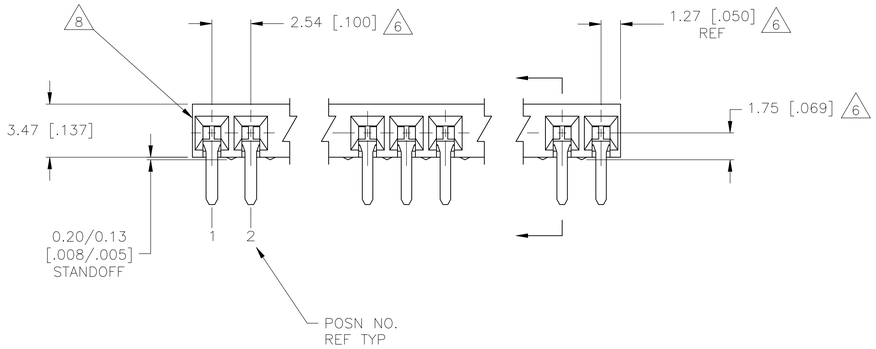

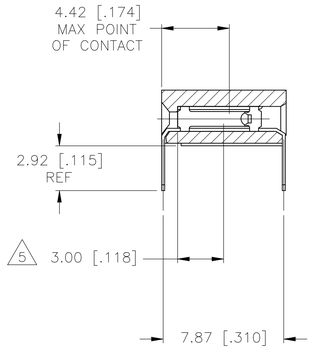

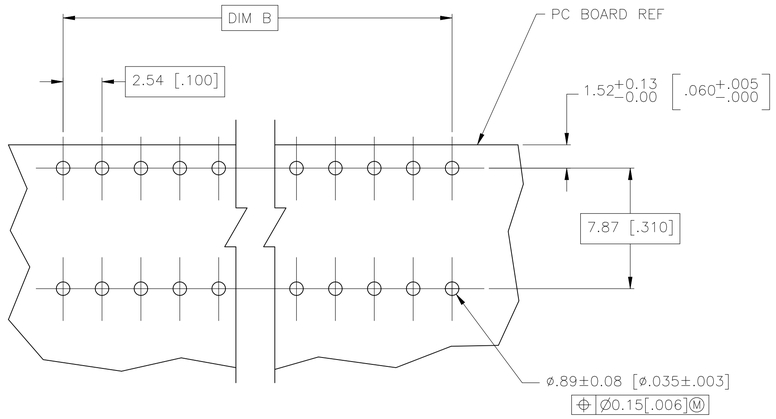

RECOMMENDED PC BOARD LAYOUT

	B	A	NO. OF POSN	ASSEMBLY PART NUMBER
12	30.48[1.200]	33.02[1.300]	13	7-5535676-2
	162.56[6.400]	165.10[6.500]	65	6-5535676-4
	160.02[6.300]	162.56[6.400]	64	6-5535676-3
	157.48[6.200]	160.02[6.300]	63	6-5535676-2
	154.94[6.100]	157.48[6.200]	62	6-5535676-1
	152.40[6.000]	154.94[6.100]	61	6-5535676-0
	149.86[5.900]	152.40[6.000]	60	5-5535676-9
	147.32[5.800]	149.86[5.900]	59	5-5535676-8
	144.78[5.700]	147.32[5.800]	58	5-5535676-7
	139.70[5.500]	144.78[5.700]	57	5-5535676-6
	139.70[5.500]	142.24[5.600]	56	5-5535676-5
	137.16[5.400]	139.70[5.500]	55	5-5535676-4
	134.62[5.300]	137.16[5.400]	54	5-5535676-3
	132.08[5.200]	134.62[5.300]	53	5-5535676-2
	129.54[5.100]	132.08[5.200]	52	5-5535676-1
	127.00[5.000]	129.54[5.100]	51	5-5535676-0
	124.46[4.900]	127.00[5.000]	50	4-5535676-9
	121.92[4.800]	124.46[4.900]	49	4-5535676-8
	119.38[4.700]	121.92[4.800]	48	4-5535676-7
	116.84[4.600]	119.38[4.700]	47	4-5535676-6
	114.30[4.500]	116.84[4.600]	46	4-5535676-5
	111.76[4.400]	114.30[4.500]	45	4-5535676-4
	109.22[4.300]	111.76[4.400]	44	4-5535676-3
	106.68[4.200]	109.22[4.300]	43	4-5535676-2
	104.14[4.100]	106.68[4.200]	42	4-5535676-1
	101.16[4.000]	104.14[4.100]	41	4-5535676-0
	99.06[3.900]	101.16[4.000]	40	3-5535676-9
	96.52[3.800]	99.06[3.900]	39	3-5535676-8
	93.98[3.700]	96.52[3.800]	38	3-5535676-7
	91.44[3.600]	93.98[3.700]	37	3-5535676-6
	88.90[3.500]	91.44[3.600]	36	3-5535676-5
	86.36[3.400]	88.90[3.500]	35	3-5535676-4
	83.82[3.300]	86.36[3.400]	34	3-5535676-3
	81.28[3.200]	83.82[3.300]	33	3-5535676-2
	78.74[3.100]	81.28[3.200]	32	3-5535676-1
	76.20[3.000]	78.74[3.100]	31	3-5535676-0
	73.66[2.900]	76.20[3.000]	30	2-5535676-9
	71.12[2.800]	73.66[2.900]	29	2-5535676-8
	68.58[2.700]	71.12[2.800]	28	2-5535676-7
	66.04[2.600]	68.58[2.700]	27	2-5535676-6
	63.50[2.500]	66.04[2.600]	26	2-5535676-5
	60.96[2.400]	63.50[2.500]	25	2-5535676-4
	58.42[2.300]	60.96[2.400]	24	2-5535676-3
	55.88[2.200]	58.42[2.300]	23	2-5535676-2
	53.34[2.100]	55.88[2.200]	22	2-5535676-1
	50.80[2.000]	53.34[2.100]	21	2-5535676-0
	48.26[1.900]	50.80[2.000]	20	1-5535676-9
	45.72[1.800]	48.26[1.900]	19	1-5535676-8
	43.18[1.700]	45.72[1.800]	18	1-5535676-7
	40.64[1.600]	43.18[1.700]	17	1-5535676-6
	38.10[1.500]	40.64[1.600]	16	1-5535676-5
	35.56[1.400]	38.10[1.500]	15	1-5535676-4
	33.02[1.300]	35.56[1.400]	14	1-5535676-3
	30.48[1.200]	33.02[1.300]	13	1-5535676-2
	27.94[1.100]	30.48[1.200]	12	1-5535676-1
	25.40[1.000]	27.94[1.100]	11	1-5535676-0
	22.86[.900]	25.40[1.000]	10	5535676-9
	17.78[.700]	22.86[.900]	9	5535676-8
	17.78[.700]	20.32[.800]	8	5535676-7
	15.24[.600]	17.78[.700]	7	5535676-6
	12.70[.500]	15.24[.600]	6	5535676-5
8	10.16[.400]	12.70[.500]	5	5535676-4
8	7.62[.300]	10.16[.400]	4	5535676-3
8	5.08[.200]	7.62[.300]	3	8 5535676-2
9	2.54[.100]	5.08[.200]	2	8 5535676-1

1. HOUSING MATERIAL: GLASS FILLED POLYESTER, COLOR- BLACK
2. CONTACT MATERIAL: PHOSPHOR BRONZE
3. CONTACT FINISH: 0.00076[.000030] THK DUPLEX PLATED GOLD ON CONTACT AREA, 3.81-7.62(.000150-.000300) MATTE TIN ALL OVER 0.00127[.000050] MIN NICKEL
4. MOLDED IN ARROW DESIGNATES THE MATING FACE OF THE CONNECTOR
5. POINT OF MEASUREMENT FOR PLATING THICKNESS OF CONTACT AREA
6. DIMENSIONS PERTAIN TO HOUSING CAVITY CENTERLINES
7. PART NUMBER AND DATE CODE MARKED IN APPROXIMATE LOCATION SHOWN,EITHER END
8. ALTERNATE LOCATION FOR DATE CODE FOR 2 AND 3 POSITION.
9. NO PART NUMBER MARKING REQUIRED FOR THIS PART.
10. ROHS 2002/95/EC COMPLIANT.
11. TE LOGO AND CSA LOGO ARE MOLDED INTO HOUSING, THIS LOCATION
12. CONTACT IN POSITION 2 OMITTED

THIS DRAWING IS A CONTROLLED DOCUMENT.

DIMENSIONS: mm

TOLERANCES UNLESS OTHERWISE SPECIFIED:
0 PLC ± –
1 PLC ± –
2 PLC ± –
3 PLC ± 0.13[.005]
4 PLC ± –
ANGLES ± –

MATERIAL 1 2
FINISH 3

DWN 05NOV04 BSV
CHK – J OLSON
APVD – J OLSON
PRODUCT SPEC –
APPLICATION SPEC –
WEIGHT –

TE Connectivity

NAME AMPMODU MODII RECPT. ASSY., HORIZ., .100CL, 1 ROW CLOSED ENTRY, SPOC, END STACK –

SIZE A1 | CAGE CODE 00779 | DRAWING NO C-5535676 | RESTRICTED TO –

CUSTOMER DRAWING | SCALE 5:1 | SHEET 1 OF 1 | REV B

4805 (1/15)