THIS DRAWING IS UNPUBLISHED. RELEASED FOR PUBLICATION -,- .
© COPYRIGHT – TE Connectivity ALL RIGHTS RESERVED.

REVISIONS					
P	LTR	DESCRIPTION	DATE	DWN	APVD
	F	REVISED PER ECO-16-017894	26APR2017	PHM	CT

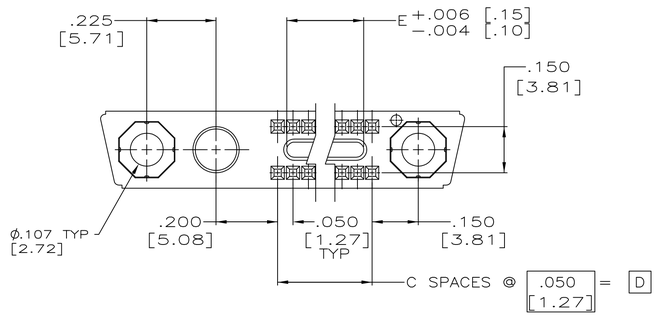

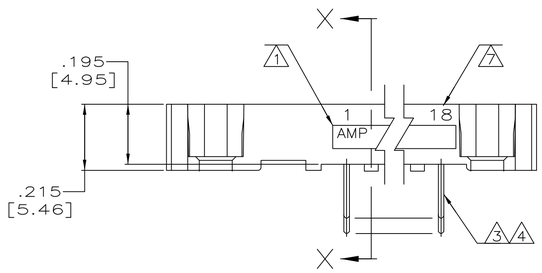

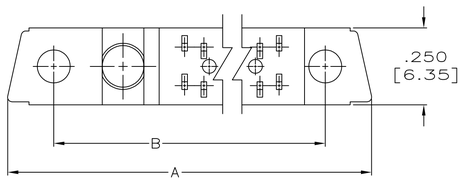

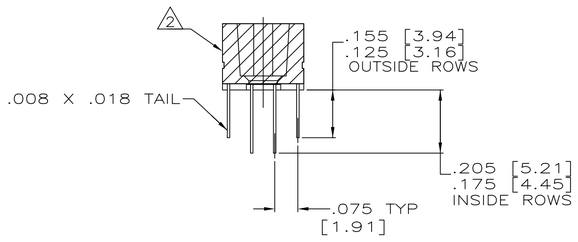

SECTION X–X

1. AMP, AMP PART NO. AND DATE CODE MARKED IN THIS APPROXIMATE AREA.
2. HOUSING MATERIAL: LIQUID CRYSTAL POLYMER PER MIL-M-24519, GLCP-30F; COLOR: GRAY.
3. CONTACT: MATERIAL = BERYLLIUM COPPER.
4. PLATED .000030 GOLD IN THE CONTACT AREA, .000100 MIN TIN LEAD ON THE TAILS, ALL OVER .000050 NICKEL UNDER PLATE.
5. WILL ACCEPT MICRO-MINATURE COAX CONTACTS PER AMP DATA SHEET 80-600, PC BOARD MOUNTED CONTACTS MUST BE MATED BEFORE SOLDERING, INSERT CONTACTS FROM THIS SIDE UP.
6. GROUP "A" INSPECTION PER MIL-C-55302 PERFORMED.
7. NUMBERS INDICATING END POSITIONS MARKED THIS SIDE ONLY.
8. MEETS SEALING EFFECTIVENESS TEST REQUIREMENT.

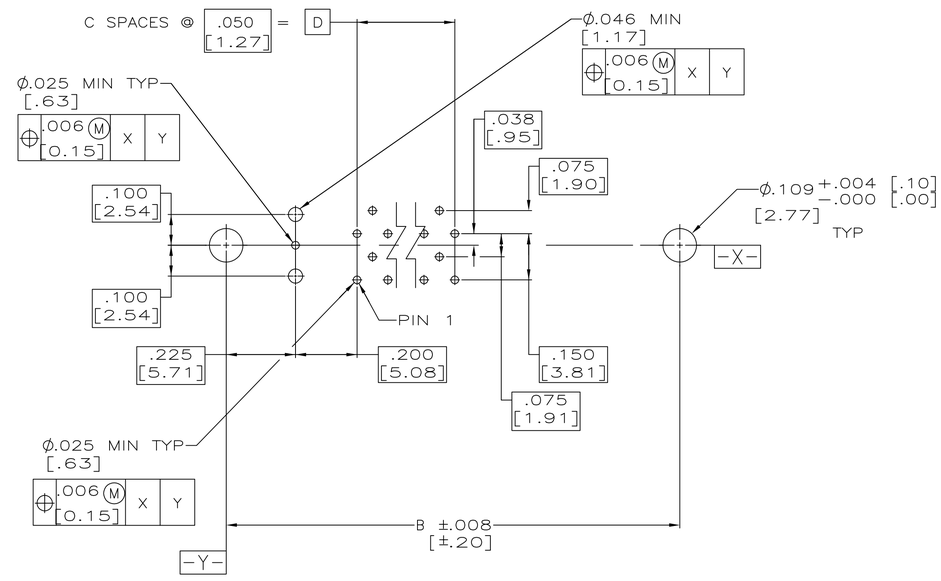

P.C. BOARD LAYOUT (CONNECTOR SIDE)

.700 [17.78]	.850 [21.59]	17	1.425 [36.20]	1.715 [4356]	1	36	448536-1
DIM E	DIM D	DIM C	DIM B	DIM A	NO OF COAX POSN	NO OF POSN	PART NO.

THIS DRAWING IS A CONTROLLED DOCUMENT.

DIMENSIONS: INCHES[mm]

TOLERANCES UNLESS OTHERWISE SPECIFIED:
0 PLC ± –
1 PLC ± –
2 PLC ± –
3 PLC ± .010 [0.25]
4 PLC ± –
ANGLES ± –

MATERIAL 2 – 3
FINISH – 4

DWN T. ALEXANDER 9-28-92
CHK D. GUTTER 9-28-92
APVD D.GUTTER 9-28-92
PRODUCT SPEC —
APPLICATION SPEC —
WEIGHT —

TE Connectivity

NAME RECEPTACLE ASSEMBLY, MINI-BOX, W/ ONE COAX PORT, AND LOW FORCE CONTACTS SPECIAL

SIZE	CAGE CODE	DRAWING NO	RESTRICTED TO
A1	00779	C-448536	—

CUSTOMER DRAWING SCALE 4:1 SHEET 1 OF 1 REV F

4805 (1/15)