REVISIONS					
P	LTR	DESCRIPTION	DATE	DWN	APVD
	AB2	REVISED PER ECN-22-147270	05APR2022	RZ	WK

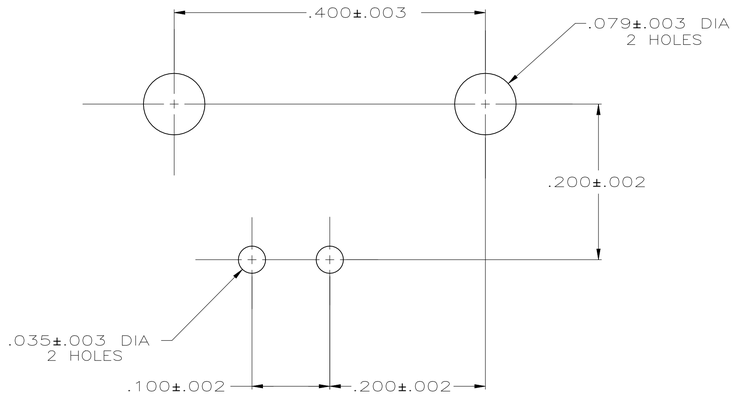

P.C.B. CONFIGURATION
SCALE=10:1

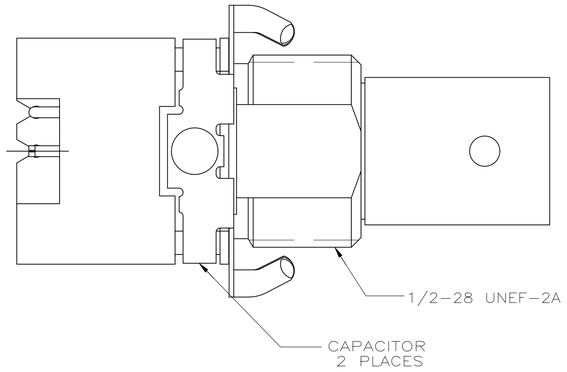

1. POLYESTER, PBT, BLACK, PER MIL-M-24519.
2. POLYMETHYLPENTENE GENERAL PURPOSE.
3. ZINC PER QQ-Z-363.
4. PHOSPHOR BRONZE PER QQ-B-750.
5. BRASS PER QQ-B-626.
6. BRASS PER ASTM-B-453.
7. NICKEL PL PER QQ-N-290.
8. TIN PLATE PER ASTM-B-545.
9. TIN PLATE PER ASTM-B-545.
10. SELECTIVELY GOLD PLATED ON INTERFACE AREA PER MIL-G-45204, .000030 THK, TIN PLATED ON SOLDER TAIL PER ASTM-B-545, ALL OVER NICKEL PL PER QQ-N-290.
11. OBSOLETE PARTS: OBSOLETE CIS STREAMLINING PER D.RENAUD/D.SINISI

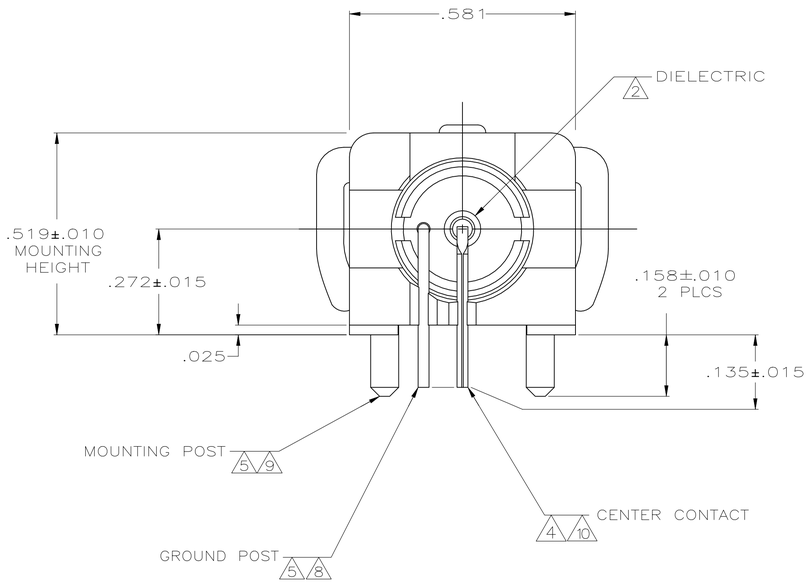

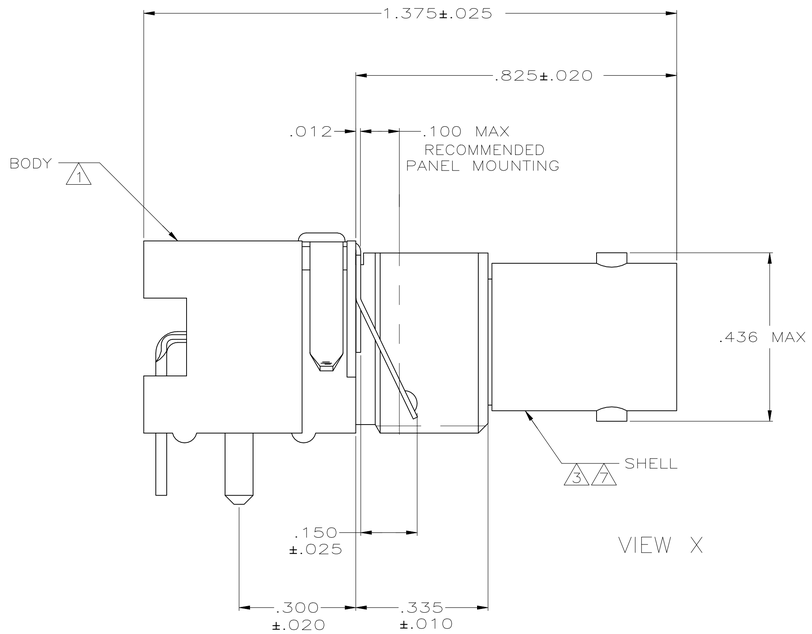

VIEW X

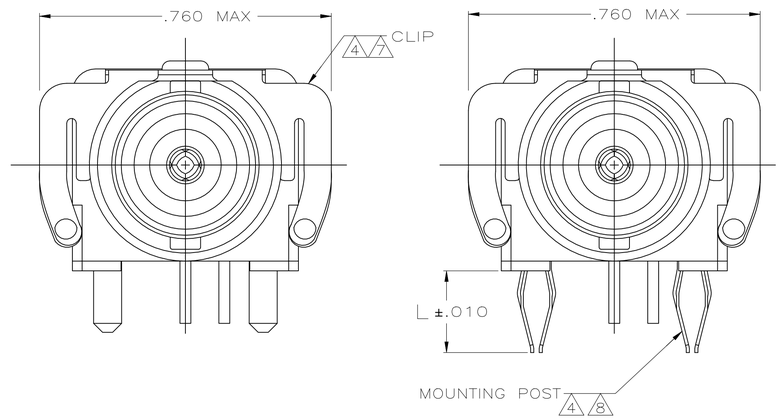

VIEW Z

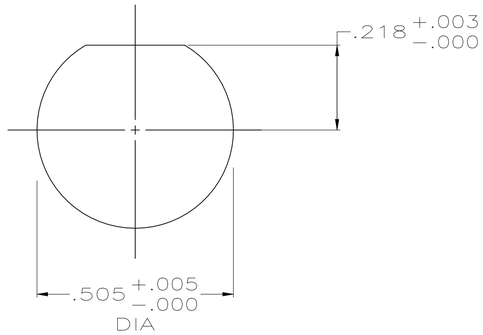

RECOMMENDED PANEL CUTOUT

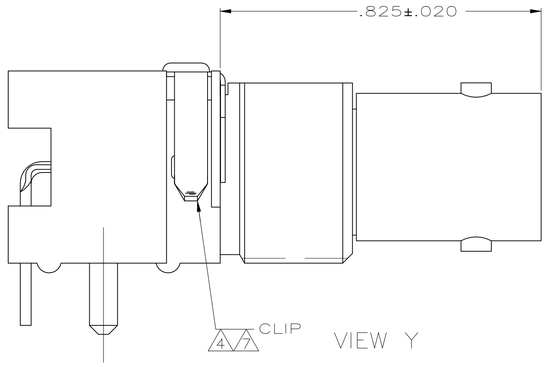

VIEW Y

OBSOLETE	–	VIEW X	VIEW X	1000 pf, 2200 VDC	1-413515-1
SUPERSEDED BY 413515-2	–	VIEW X OR Y	VIEW X	9400 pf, 1500 VDC	1-413515-0
	.110	VIEW Z	VIEW X	9400 pf, 1500 VDC	413515-9
SUPERCEDED BY 5413515-8	.185	VIEW Z	VIEW X	9400 pf, 1500 VDC	413515-8
	.110	VIEW Z	VIEW X	7900 pf, 1600 VDC	413515-7
SUPERSEDED BY 413515-7	.185	VIEW Z	VIEW X	7900 pf, 1600 VDC	413515-6
SUPERSEDED BY 413515-2	–	VIEW X OR Y	VIEW Y	9400 pf, 1500 VDC	413515-5
SUPERSEDED BY 413515-2	–	VIEW X OR Y	VIEW Y	9400 pf, 500 VDC	413515-4
11 OBSOLETE	–	VIEW X OR Y	VIEW X	20000 pf, 500 VDC	~~413515-3~~
OBSOLETE	–	VIEW X OR Y	VIEW X	9400 pf, 1500 VDC	413515-2
SUPERSEDED BY 413515-2	–	VIEW X OR Y	VIEW X	9400 pf, 500 VDC	413515-1
	L	MOUNTING POST	CLIP	CAPACITANCE & VOLTAGE	PART NO

THIS DRAWING IS A CONTROLLED DOCUMENT.

DIMENSIONS: INCHES

TOLERANCES UNLESS OTHERWISE SPECIFIED:
0 PLC ± –
1 PLC ± –
2 PLC ± –
3 PLC ± .008
4 PLC ± –
ANGLES ± –

MATERIAL 1 THRU 6

FINISH 7 8 9 10

DWN P. KERLIN 5/4/90
CHK R. E. RUTH 5/18/90
APVD P. BIRD 5/18/90
PRODUCT SPEC 108-1269
APPLICATION SPEC –
WEIGHT 0.000000
CUSTOMER DRAWING

TE Connectivity

NAME JACK,DECOUPLER, RIGHT ANGLE,LOW PROFILE, SERIES BNC

SIZE	CAGE CODE	DRAWING NO	RESTRICTED TO
A1	00779	C-413515	–

SCALE 4:1 SHEET 1 OF 1 REV AB2

4805 (1/15)