THIS DRAWING IS UNPUBLISHED. RELEASED FOR PUBLICATION 20
© COPYRIGHT 20 BY - ALL RIGHTS RESERVED.

REVISIONS

P	LTR	DESCRIPTION	DATE	DWN	APVD
	D	ECO-14-008653	10JUN2014	JM	LS

1. MATERIAL: PANEL - STEEL, POWDER COAT, BLACK.
JUMPER TROUGH: -1 POLYCARBONATE MOLDING COMPOUND, IVORY.
PUSH RIVET: -1 NYLON, NATURAL

2. FOUR 10-32 X 15.88[.625] LONG STAINLESS STEEL CROSS RECESSED ROUND HEAD SCREWS AND FOUR #10 STAINLESS STEEL EXTERNAL TOOTH LOCKWASHERS FOR MOUNTING PANEL ASSEMBLY, SHIPPED LOOSE AND NOT SHOWN.

3. PANEL HAS TWO STAINLESS STEEL GROUNDING STUDS ON REAR OF PANEL FOR OPTIONAL GROUNDING LUGS.

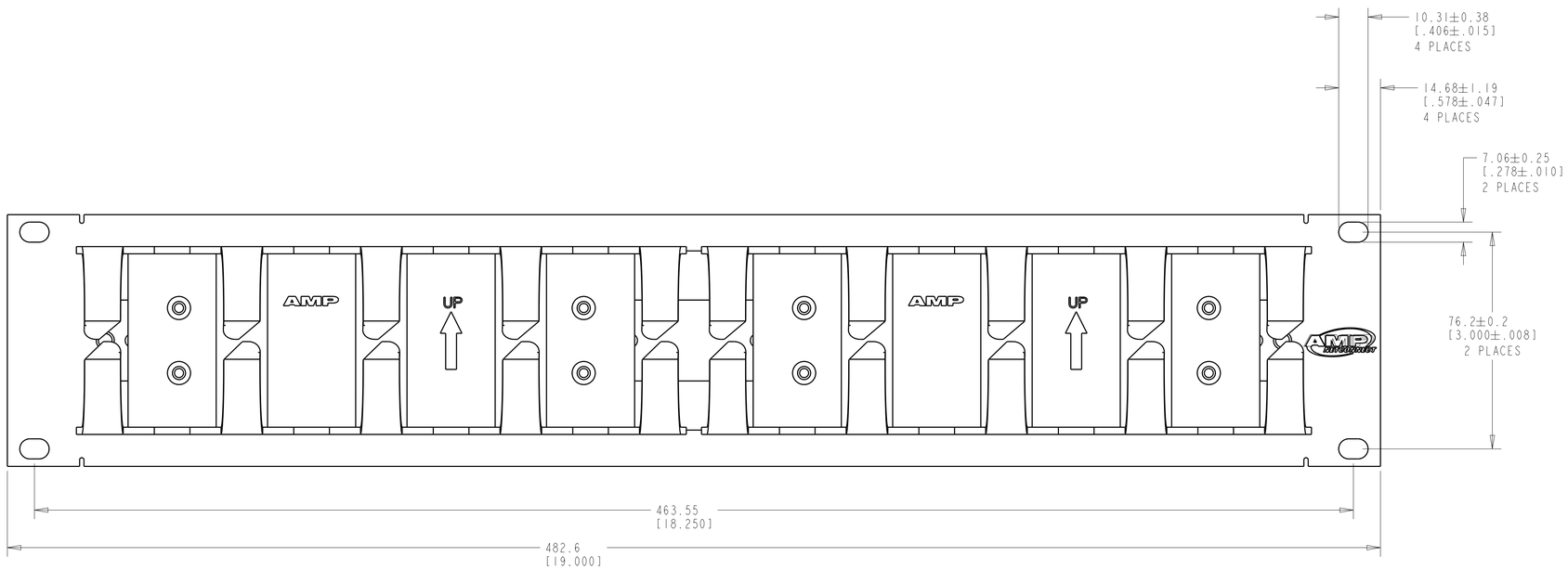

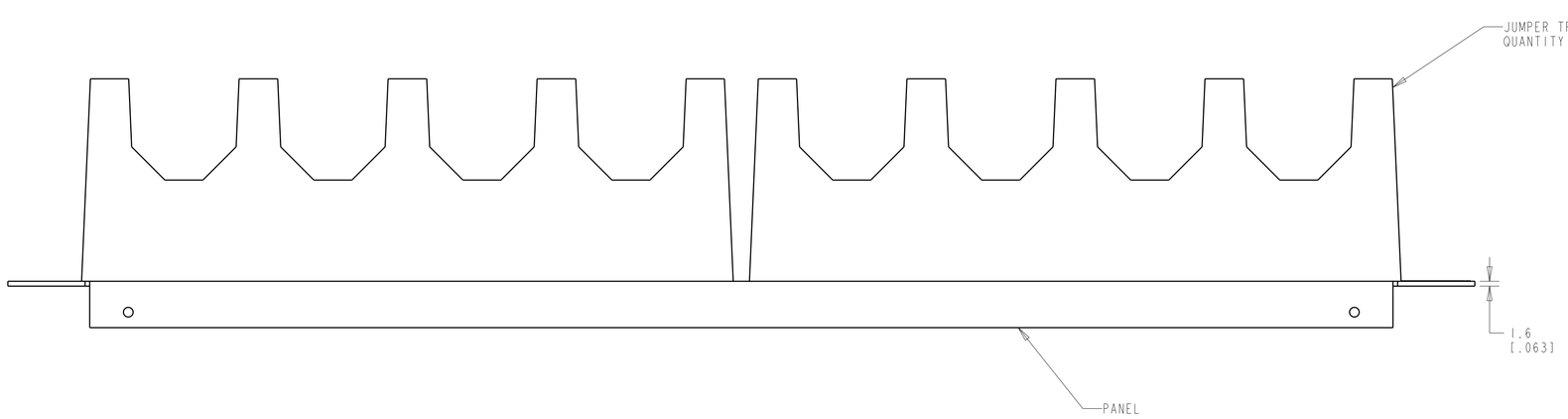

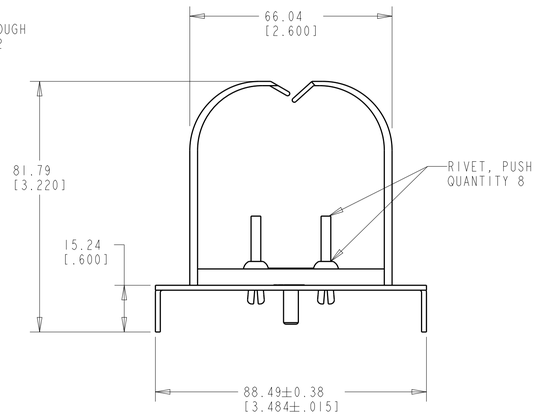

OBSOLETE

PART NO.
~~406641-2~~
406641-1

THIS DRAWING IS A CONTROLLED DOCUMENT.

DIMENSIONS: mm[INCHES]

TOLERANCES UNLESS OTHERWISE SPECIFIED:
0 PLC ±-
1 PLC ±-
2 PLC ±0.25[.01]
3 PLC ±0.13[.005]
4 PLC ±-
ANGLES ±-

MATERIAL - 1 -
FINISH - 1 -

DWN B. SIMPSON 10MAR97
CHK BHS 10MAR97
APVD D. WILLIS 10MAR97
PRODUCT SPEC -
APPLICATION SPEC -
WEIGHT -

TE Connectivity

NAME PANEL, 110XC JUMPER TROUGH -

SIZE	CAGE CODE	DRAWING NO	RESTRICTED TO
A1	-	C-406641	-

CUSTOMER DRAWING | SCALE 1:1 | SHEET 1 OF 1 | REV D

4805 (3/13)