THIS DRAWING IS UNPUBLISHED. RELEASED FOR PUBLICATION -
© COPYRIGHT - TE CONNECTIVITY ALL RIGHTS RESERVED.

LOC	DIST
IR	-

REVISIONS

P	LTR	DESCRIPTION	DATE	DWN	APVD
	Y	ECO-11-025237	06JAN2012	PS	RRP

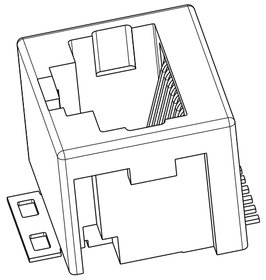

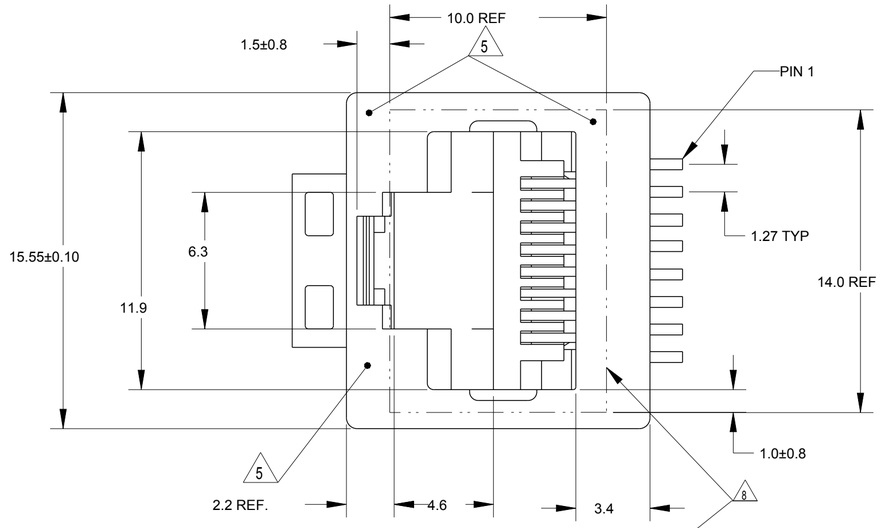

NOTES:

1. TOLERANCES UNLESS OTHERWISE SPECIFIED: ±0.15.
2. CONTACT PLATING:
   OVERALL: Ni 1.27µm MIN. ALL OVER THE CONTACTS
   SOLDER ZONE: Sn 3.5-5.0µm ON THE SOLDER ZONE OF THE CONTACT
   MATING ZONE: PLATING CONFIRMS TO PRODUCT REQUIREMENTS
   AS PER SPECIFICATION 108-19117
3. CONTACT AND BRACKET MATERIAL:
   CONTACTS: PHOSPHOR BRONZE
   SOLDER BRACKET: TINPLATED BRASS WITH NICKEL UNDERLAYER.
4. THIS JACK CAN ALSO BE APPLIED HANGING THROUGH A HOLE, IN A PRINTED CIRCUIT BOARD. SEE LEFT PCB LAYOUT.
5. SURFACE CAN BE USED FOR PICKING THE MODULAR JACK WITH, TYPE II SMD MACHINE.
6. MEASURED AT HEEL OF CONTACTS, COPLANARITY AT TIPS MAX. 0.18mm.
7. TAPE AND REEL PACKAGING ACCORDING TO EIA 481-3 SPECIFICATIONS.
8. INCLUDES KAPTON TAPE (10mm x 14mm) ON TOP SURFACE FOR PICK AND PLACE UNIT
9. OBSOLETE
10. HOUSING MATERIAL:
    HOUSING: 30% G.F. PA4T(HALOGEN FREE), COLOR BLACK, UL 94V-0.

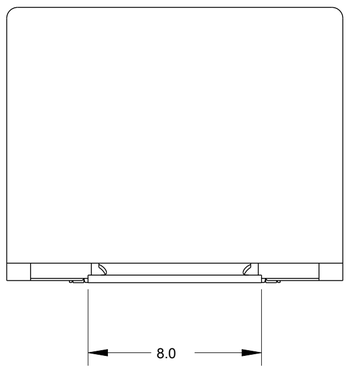

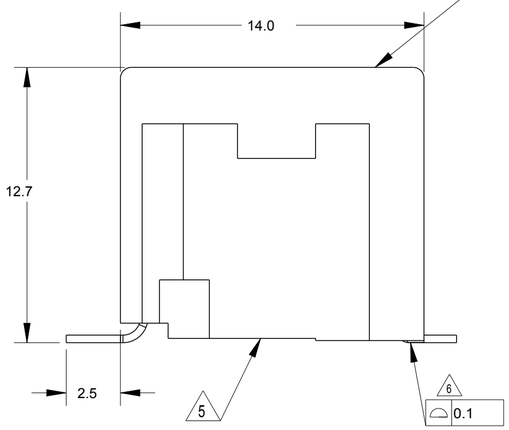

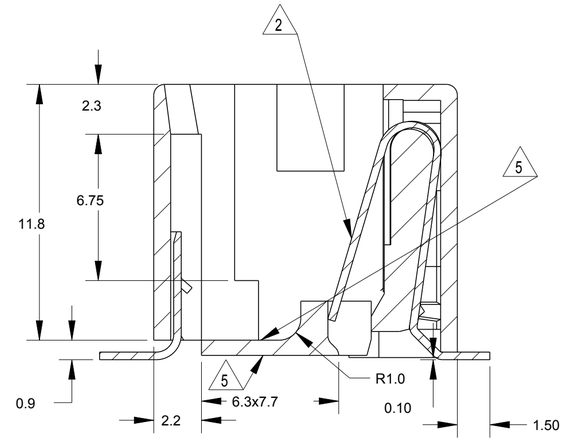

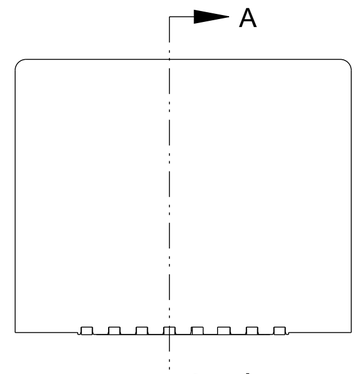

SECTION A-A

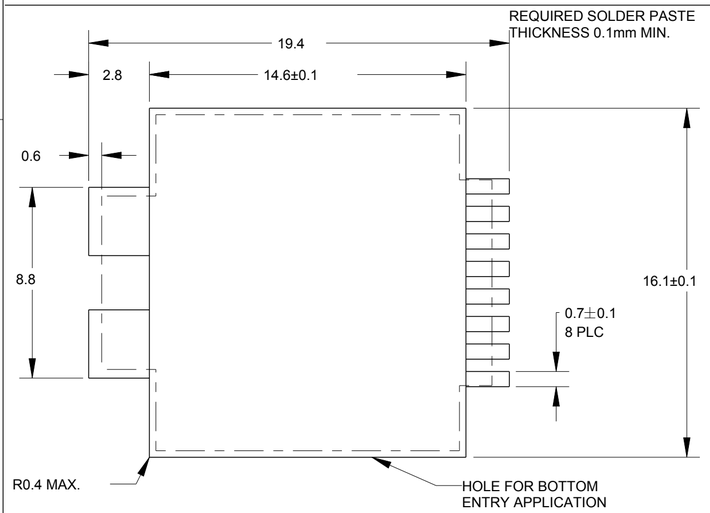

PRINTED CIRCUIT BOARD LAYOUT (BOTTOM ENTRY APPL.)

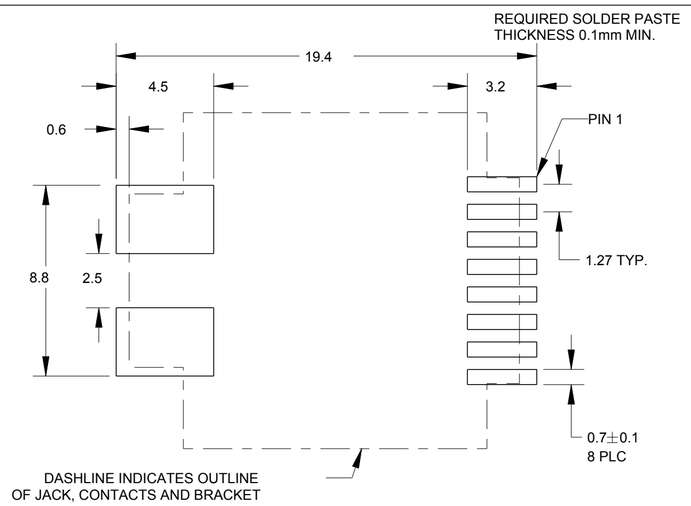

PRINTED CIRCUIT BOARD LAYOUT (TOP ENTRY APPL.)

8 POSN./8 CONTACT	250 PCS ON Ø 360mm OD REEL TOP ENTRY ORIENTATION PER DETAIL B1	10	3-338088-3
8 POS./8 CONTACT	250PCS ON Ø 360mm OD REEL TOP ENTRY ORIENTATION PER DETAIL B1 WITH KAPTON TAPE FOR PICK AND PLACING	10	1-338088-6
~~8 POSN./8 CONTACT~~	~~250 PCS ON Ø 360mm OD REEL~~ ~~BOTTOM ENTRY ORIENTATION PER DETAIL B2~~	~~9~~	~~1-338088-5~~
8 POSN./8 CONTACT	500 PCS ON Ø 560mm OD REEL TOP ENTRY ORIENTATION PER DETAIL B1	10	2-338088-3
8 POSN./8 CONTACT	250 PCS ON Ø 360mm OD REEL TOP ENTRY ORIENTATION PER DETAIL B1	10	1-338088-3
REMARKS	7 PACKAGING		PART NUMBER

THIS DRAWING IS A CONTROLLED DOCUMENT.

DIMENSIONS: mm

TOLERANCES UNLESS OTHERWISE SPECIFIED:
0 PLC ±
1 PLC ±
2 PLC ±
3 PLC ±
4 PLC ±
ANGLES ±

MATERIAL: SEE NOTE 3 -

FINISH: SEE NOTE 2 -

DWN: E.V.ELJK 30-Sep-96
CHK: E.STELLINGA Dec-96
APVD: R.SMEETS -
PRODUCT SPEC: 108-19117
APPLICATION SPEC: 114-19041
WEIGHT: 2.1 gr

TE Connectivity

NAME: INVERTIBLE MODULAR JACK, 8 POSITION SURFACE MOUNT APPLICATION

SIZE	CAGE CODE	DRAWING NO	RESTRICTED TO
A2	00779	C-338088	-

CUSTOMER DRAWING | SCALE 5:1 | SHEET 1 OF 2 | REV Y

1471-9 (3/11)

THIS DRAWING IS UNPUBLISHED. RELEASED FOR PUBLICATION -
© COPYRIGHT - TE CONNECTIVITY ALL RIGHTS RESERVED.

LOC	DIST
IR	-

REVISIONS

P	LTR	DESCRIPTION	DATE	DWN	APVD
	-	SEE SHEET 1	-	-	-

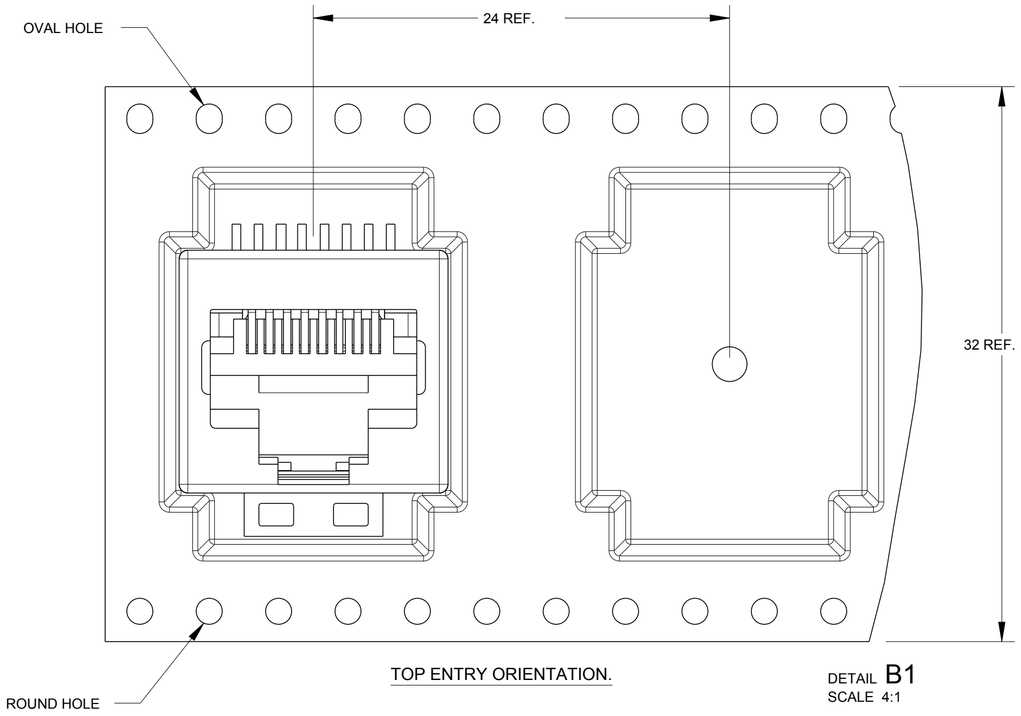

TOP ENTRY ORIENTATION.

DETAIL B1
SCALE 4:1

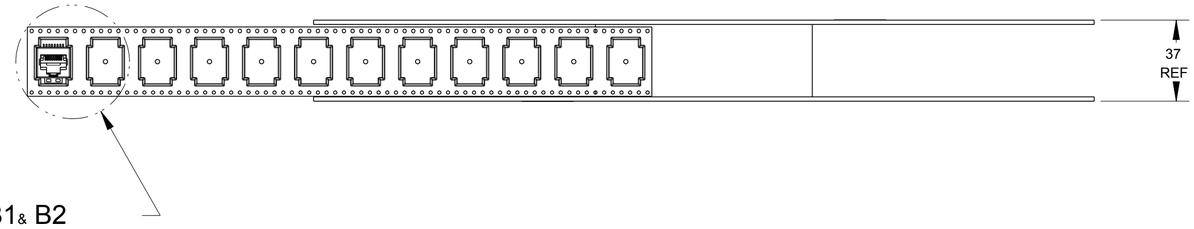

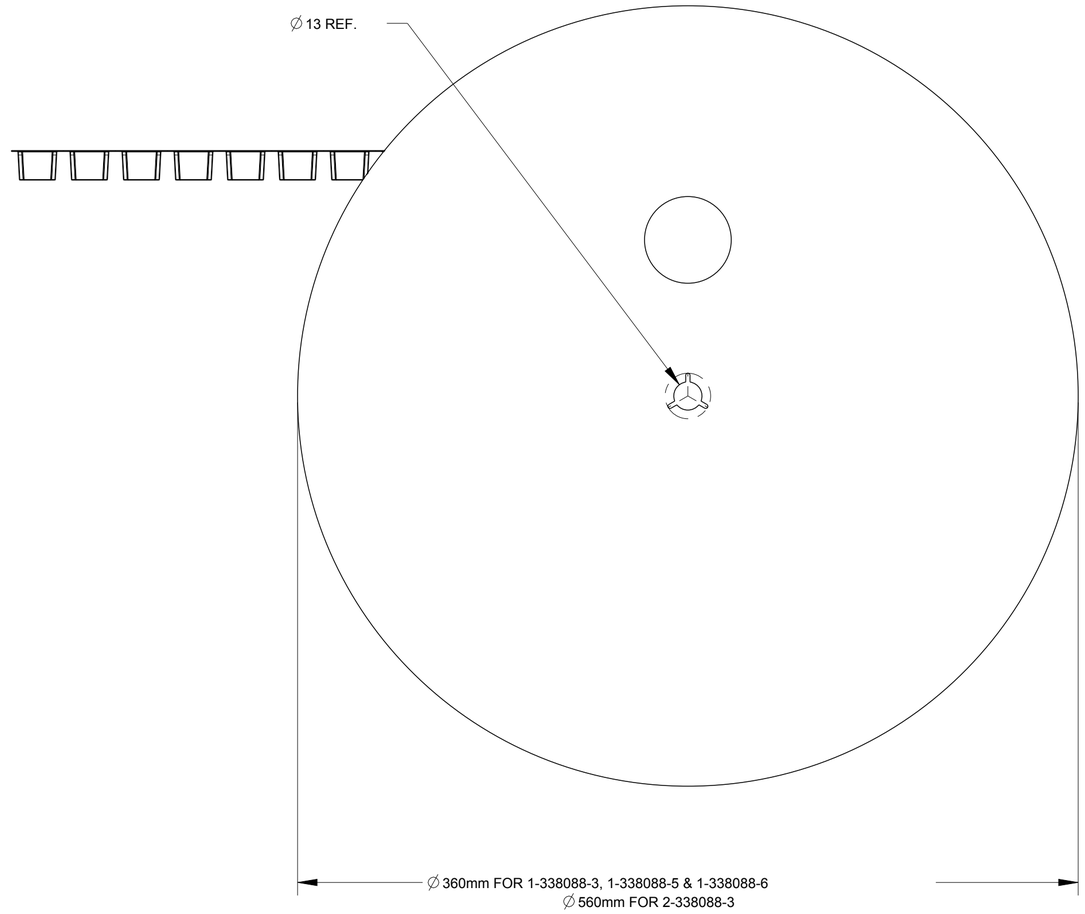

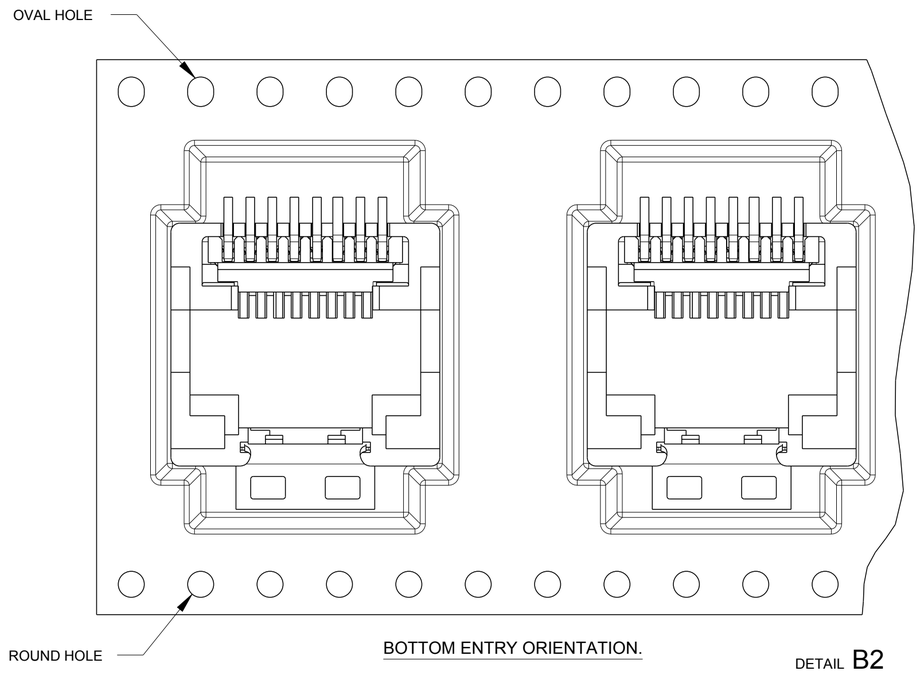

BOTTOM ENTRY ORIENTATION.

DETAIL B2
SCALE 4:1

THIS DRAWING IS A CONTROLLED DOCUMENT.

DIMENSIONS: mm

TOLERANCES UNLESS OTHERWISE SPECIFIED:
0 PLC ±-
1 PLC ±-
2 PLC ±-
3 PLC ±-
4 PLC ±-
ANGLES ±-

MATERIAL -

FINISH -

DWN E.v.ELJK 30-Sep-96
CHK E.STELLINGA Dec-96
APVD R.SMEETS -
PRODUCT SPEC 108-19117
APPLICATION SPEC 114-19041
WEIGHT 2.1 gr

TE Connectivity

NAME
INVERTIBLE MODULAR JACK,
8 POSITION
SURFACE MOUNT APPLICATION

SIZE	CAGE CODE	DRAWING NO	RESTRICTED TO
A2	00779	C-338088	-

CUSTOMER DRAWING | SCALE 5:1 | SHEET 2 OF 2 | REV Y