THIS DRAWING IS UNPUBLISHED. RELEASED FOR PUBLICATION -,- .
© COPYRIGHT - By Tyco Electronics Japan G.K. ALL RIGHTS RESERVED.

LOC	DIST
J	—

REVISIONS 変更

P	LTR	DESCRIPTION	DATE	DWN	APVD
	B	ADDED 0-6	31JAN14	K.M	H.T

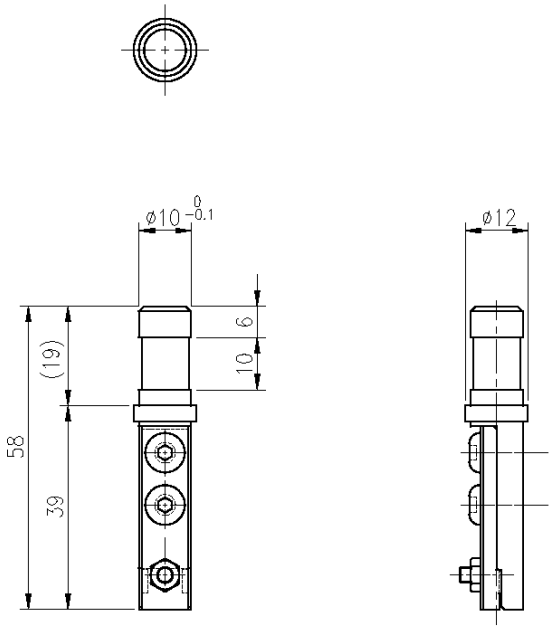

仕様 (Specifications)

P/N	APPLICABLE TERMINAL
234789-1	POKE-IN WITH .187 TAB TERMINAL (316300-X)
234789-2	POKE-IN WITH .110 TAB TERMINAL (63062-X, 63063-X)
234789-3	.187 FASTON TAB TERMINAL .300 SERIES (62511-X, 62514-X, 63273-X)
234789-4	.187 TAB TERMINAL (63584-1, 63585-1, ONLY)
234789-5	.250 TAB TERMINAL
234789-6	.187 FASTON TAB TERMINAL .500 SERIES (63708-1)

注記 1 ： 上記インサーションヘッドは1端子挿入用ツールヘッドです。
(NOTES 1 : This INSERTION HEAD is for the terminal insertion of one .)

注記 2 ： 端子を挿入するには別途プレスが必要です。
(NOTES 2 : Press is separately necessary to insert the terminal.)

THIS DRAWING IS A CONTROLLED DOCUMENT.

DIMENSIONS: 単位： 耗 mm

TOLERANCES UNLESS OTHERWISE SPECIFIED: 一般公差

0 PLC	± -
1 PLC	± -
2 PLC	± -
3 PLC	± -
4 PLC	± -
ANGLES	± -

MATERIAL 材料 -

FINISH 仕上 -

DWN	M. TOKUHO	19 DEC 95
CHK	S. YABE	26 DEC 95
APVD	H. ABE	28 DEC 95

PRODUCT SPEC 製品規格 —

APPLICATION SPEC 取付適用規格 —

WEIGHT —

TE Connectivity

NAME 名称: MAG-MATE INSERTION HEAD

SIZE	CAGE CODE	DRAWING NO 番号	RESTRICTED TO
A3	00779	C-234789	—

CUSTOMER DRAWING

SCALE 尺度	SHEET	REV
—	1 OF 1	B

1470-19 (3/11)