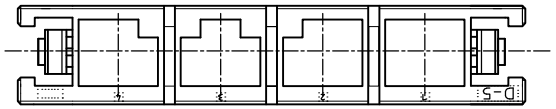

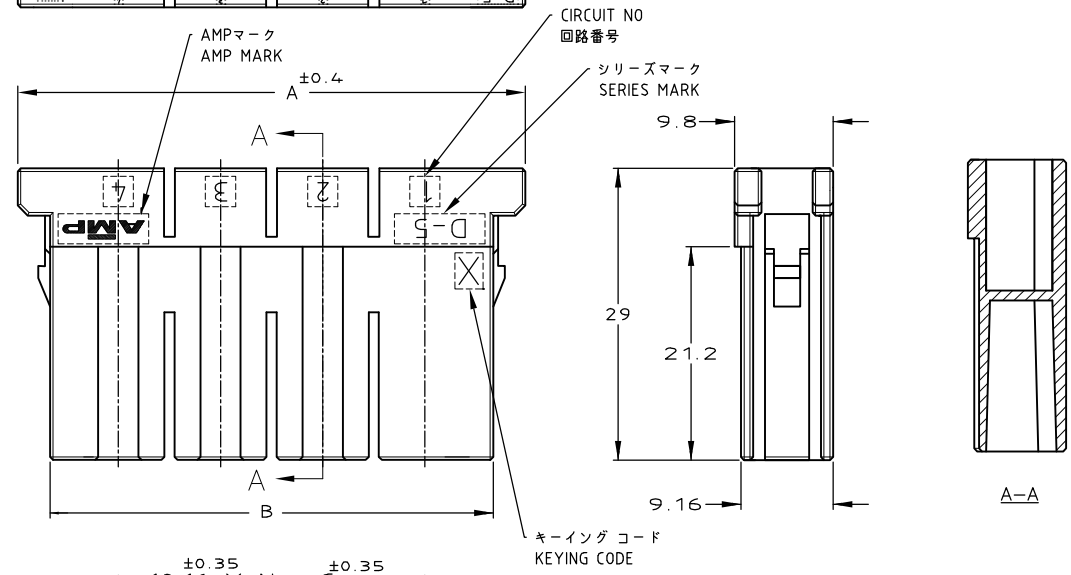

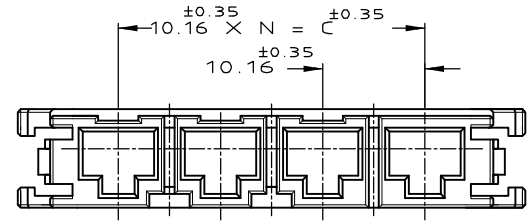

1–2040021–4
(KEYING CODE:X)

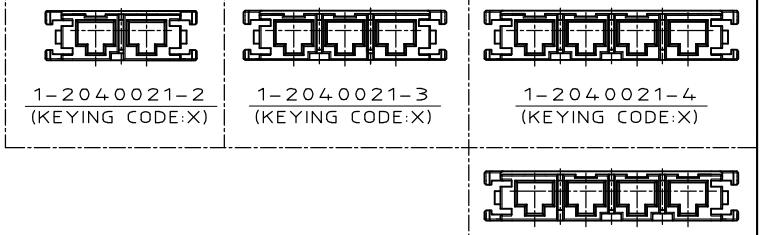

1–2040021–2
(KEYING CODE:X)

1–2040021–3
(KEYING CODE:X)

1–2040021–4
(KEYING CODE:X)

2–2040021–4
(KEYING CODE:Y)

注 記

1. 材料 ハウジング ガラス入り熱可塑性 ポリエステル樹脂(94V–0),色 ナチュラル
2. 製品規格 : 108–5453

NOTES

1. MATERIAL:HOUSING:GLASS FILED THERMO PLASTIC ,POLYESTER(94V–0),COLOR:NATURAL
2. PRODUCT SPEC :108–5453

KEY	C	B	A	N	POS	P/N
Y	↑	↑	↑	↑	↑	2–2040021–4
X	30.48	44.08	50.48	3	4	1–2040021–4
X	20.32	33.92	40.32	2	3	1–2040021–3
X	10.16	23.76	30.16	1	2	1–2040021–2

LTR	変更 (REVISION RECORD)	DR	CHK	DATE
D	REVISED	T.N	N.Y	20JAN 2012
C	REVISED	T.N	N.Y	17JAN 2012
B1	REVISED	S.I	S.M	25AUG 2008
B	REVISED	T.S	D.M	1FEB 2008
A	RELEASED	T.S	D.M	10JUN 2008

TE Connectivity

抱合電線断面(WIRE RANGE) mm² (AWG –)	被覆外(INSULATION DIA.) mmφ
材料(MATERIAL) 1	仕上(FINISH)
DR. 14/NOV/'07 T.Sakamoto	DE. 10/JAN/'08 D.Mitsugi
CHK. 10/JAN/'08 D.Mitsugi	APP.

名称(NAME) 1列 ダミー リセ ハウジング4P ロックレバーカット
SINGLE ROW DUMMY REC HSG 4P WITH CUTTING OUT LOCK LEVER
<DYNAMIC D-5200S>

一般公差 (GENERAL TOLERANCE)
10以下 : ±0.2
10を超え 30以下 : ±0.25
30を超え100以下 : ±0.3
角 度 : ±3°

A3	LOC J	番号(No.) C-2040021
尺度(SCALE) 2–1	REV. D	SHEET 1 OF 1

NUMBER 2040021

三角法(3rd ANGLE PROJECTION)

METRIC

単位 粍 DIMENSIONS IN MM. DO NOT SCALE PRINT

PRINT DIST

AMP–J010–2C
REV.3/'93

(CUSTOMER DRAWING) 顧 客 用 図 面