THIS DRAWING IS UNPUBLISHED. RELEASED FOR PUBLICATION -,- .
© COPYRIGHT - BY TYCO ELECTRONICS CORPORATION. ALL RIGHTS RESERVED.

LOC	DIST
G	14

REVISIONS

P	LTR	DESCRIPTION	DATE	DWN	APVD
	2	CHANGED PLATING THK	15NOV07	JR	MS

AMP WIRE RANGE	Listed FILE E13288	LR7189 Certified
16-14 AWG SOLID OR STRANDED	N/A	N/A

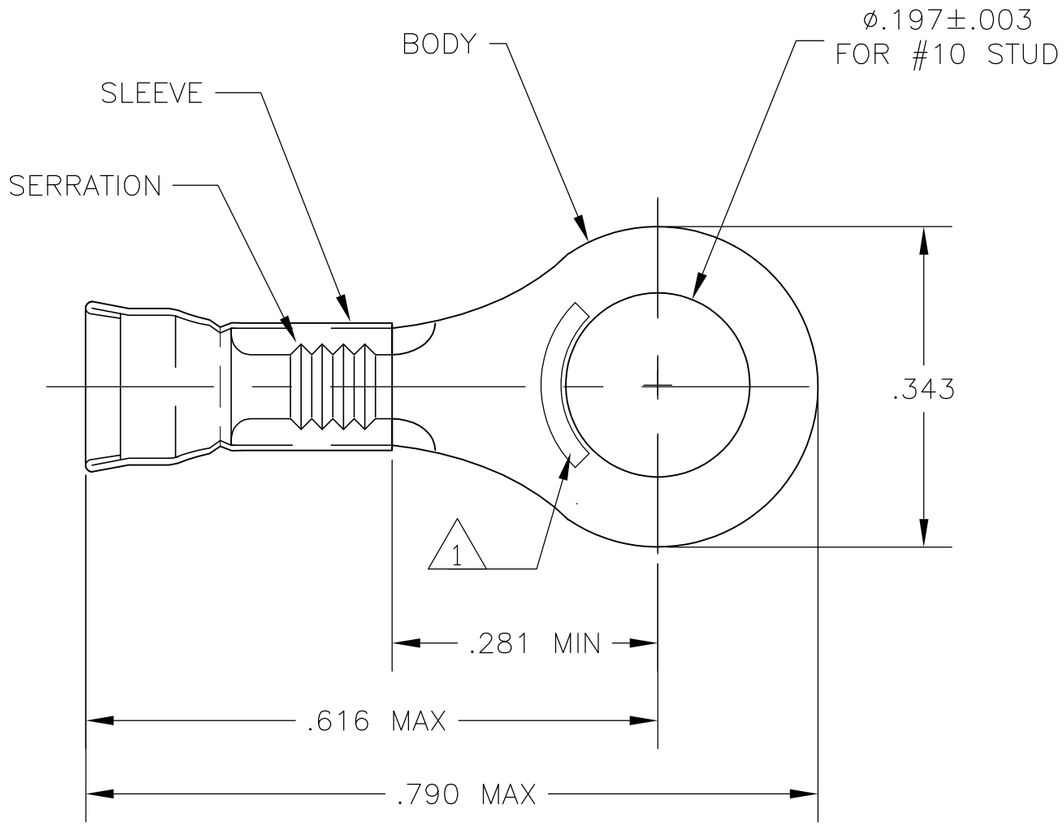

1. STAMP AMP 16-14*, APPROX WHERE SHOWN
2. WIRE INSULATION DIA IS .105-.150
3. TONGUE MATL THK IS .031±.002
4. MATERIAL: BODY- COPPER PER ASTM B152
   SLEEVE- COPPER PER ASTM B152
5. FINISH: BODY & SLEEVE:
   TIN-LEAD PLATE 60/40, .000300 MIN THK
6. PRELIMINARY - NOT FOR PRODUCTION

QTY	PACKAGE TYPE	PART NO
1000	LOOSE PIECE	6 1958010-1

AMP INCORPORATED
CUSTOMER SERVICE SYSTEMS

FOR ADDITIONAL PRODUCT INFORMATION OR COPIES OF DRAWINGS AND TECHNICAL DOCUMENTS	PRODUCT INFORMATION CENTER 1-800-522-6752
FOR APPLICATION TOOLING INFORMATION	TOOLING ASSISTANCE CENTER 1-800-722-1111
FOR ORDER ENTRY	1-800-526-5142

THIS DRAWING IS A CONTROLLED DOCUMENT FOR AMP INCORPORATED. IT IS SUBJECT TO CHANGE AND THE CONTROLLING ENGINEERING ORGANIZATION SHOULD BE CONTACTED FOR THE LATEST REVISION.

MAX RECOMMENDED OPERATING TEMPERATURE: 170°C [338°F]

VOLTAGE RATING: - -

CIRCULAR MIL AREA: 1.04-2.62mm² [2050-5180] SOLID OR STRANDED

THIS DRAWING IS A CONTROLLED DOCUMENT.

DIMENSIONS: INCHES

TOLERANCES UNLESS OTHERWISE SPECIFIED:

0 PLC	± -
1 PLC	± -
2 PLC	± -
3 PLC	± .008
4 PLC	± -
ANGLES	± 5°

MATERIAL - 4

FINISH - 5

DWN	jr ruth	24AUG06
CHK	MJ SPICER	24AUG06
APVD	MJ SPICER	24AUG06
PRODUCT SPEC	—	
APPLICATION SPEC	—	
WEIGHT	—	

Tyco Electronics
Tyco Electronics Corporation
Harrisburg, PA 17105-3608

NAME: TERMINAL, RING, DIAMOND GRIP, WIRE SIZE: 16-14 AWG
—

SIZE	CAGE CODE	DRAWING NO	RESTRICTED TO
A3	00779	C-1958010	—

CUSTOMER DRAWING | SCALE 6:1 | SHEET 1 OF 1 | REV 2

AMP 1470-19 REV 31MAR2000