THIS DRAWING IS UNPUBLISHED. RELEASED FOR PUBLICATION -,- .
© COPYRIGHT 2006 BY TYCO ELECTRONICS CORPORATION. ALL INTERNATIONAL RIGHTS RESERVED.

LOC	DIST
GP	00

REVISIONS

P	LTR	DESCRIPTION	DATE	DWN	APVD
	G	REVISED PER ECO-09-002944	20MAR2009	CR	SB

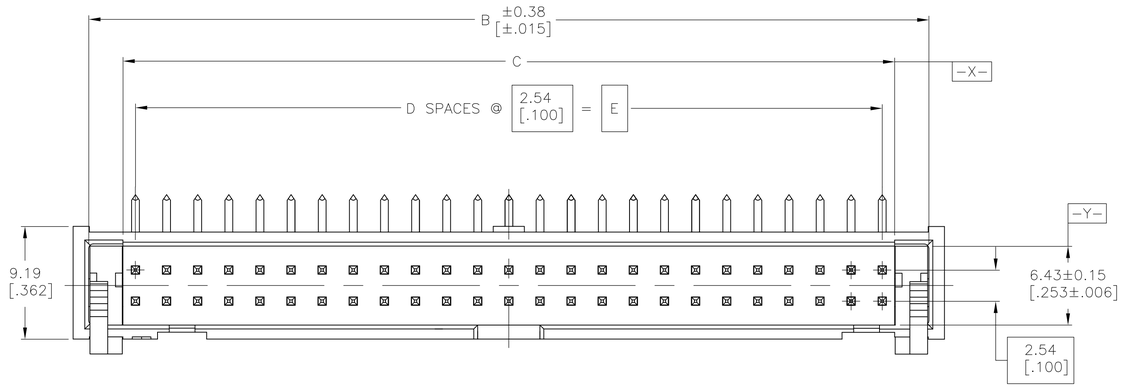

1. HOUSING: PBT, UL94V-0, COLOR: BLACK
   POSTS: PHOSPHOR BRONZE.
   LATCHES: ZINC ALLOY.
2. POSTS: GOLD FLASH OVER PALLADIUM-NICKEL PLATE, 0.76µm[.000030] MIN TOTAL ON MATING AREA, 2.54µm[.000100] MIN TIN PLATE ON SOLDER-TAIL, ALL OVER 1.27µm[.000050] MIN NICKEL UNDERPLATE ON ENTIRE POST.
   OR
   0.76µm[.000030] MIN GOLD PLATE ON MATING AREA, 2.54µm[.000100] MIN TIN PLATE ON THE SOLDER-TAIL, 1.27µm[.000050] MIN NICKEL UNDERPLATE ON THE ENTIRE POST.
   LATCHES: BLACK NICKEL OVER COPPER.
3. DATUMS S & T TO BE ESTABLISHED BY CUSTOMER.
4. ALTERNATE LOCATION/ORIENTATION FOR POSITION #1 INDICATOR.

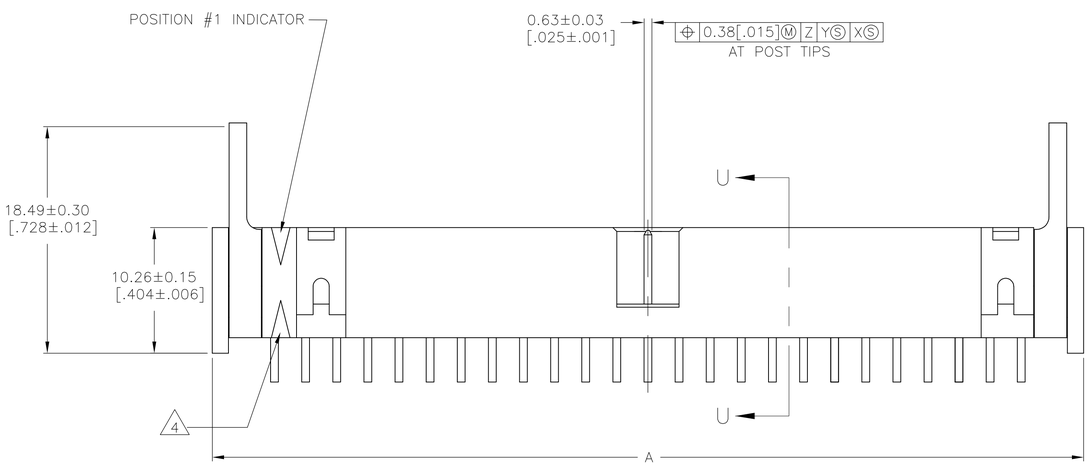

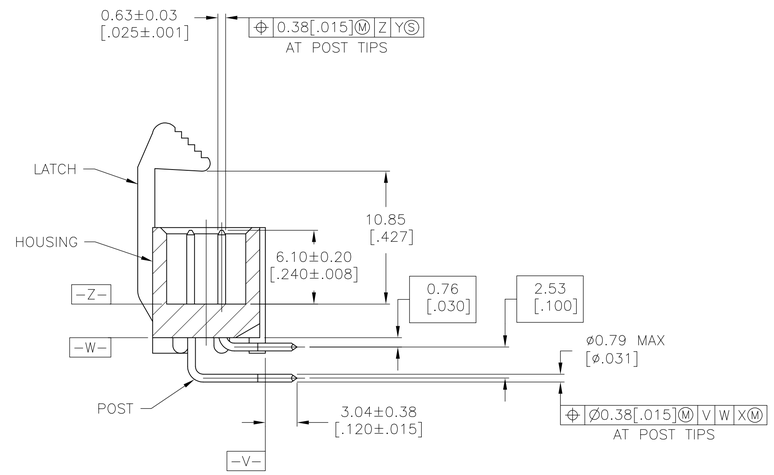

SECTION U-U

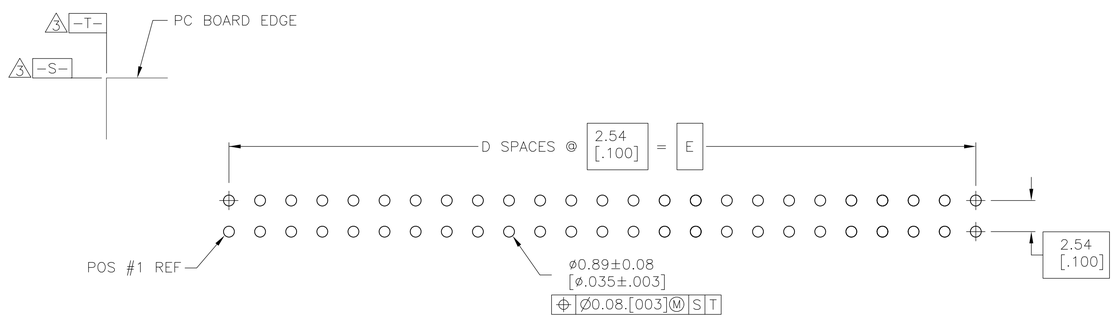

RECOMMENDED PC BOARD LAYOUT
(VIEWED FROM CONNECTOR SIDE)

E	D	C	B	A	NO OF POS	PART NUMBER
60.96 [2.400]	24	62.99 [2.480]	68.48 [2.696]	71.12 [2.800]	50	1-1888382-5

THIS DRAWING IS A CONTROLLED DOCUMENT.

DIMENSIONS: mm [INCHES]

TOLERANCES UNLESS OTHERWISE SPECIFIED:
0 PLC ± –
1 PLC ± –
2 PLC ± –
3 PLC ± 0.13[.005]
4 PLC ± –
ANGLES ± –

MATERIAL 1
FINISH 2

DWN J.GERACE 01MAR06
CHK S.BOLASH 01MAR06
APVD M.WALMSLEY 01MAR06
PRODUCT SPEC —
APPLICATION SPEC —
WEIGHT —

Tyco Electronics
Tyco Electronics Corporation
Harrisburg, PA 17105-3608

NAME HEADER ASSEMBLY, RIGHT ANGLE, SHORT EJECT LATCH, LOW PROFILE, IDC

SIZE A1 | CAGE CODE 00779 | DRAWING NO C-1888382 | RESTRICTED TO —

CUSTOMER DRAWING | SCALE 4:1 | SHEET 1 OF 1 | REV G

4805 (1/08)