THIS DRAWING IS UNPUBLISHED. RELEASED FOR PUBLICATION -.- .
© COPYRIGHT - BY TYCO ELECTRONICS CORPORATION. ALL RIGHTS RESERVED.

LOC	DIST
A0	DF

REVISIONS

P	LTR	DESCRIPTION	DATE	DWN	APVD
	A	RELEASED	5-3-05	CT	KH

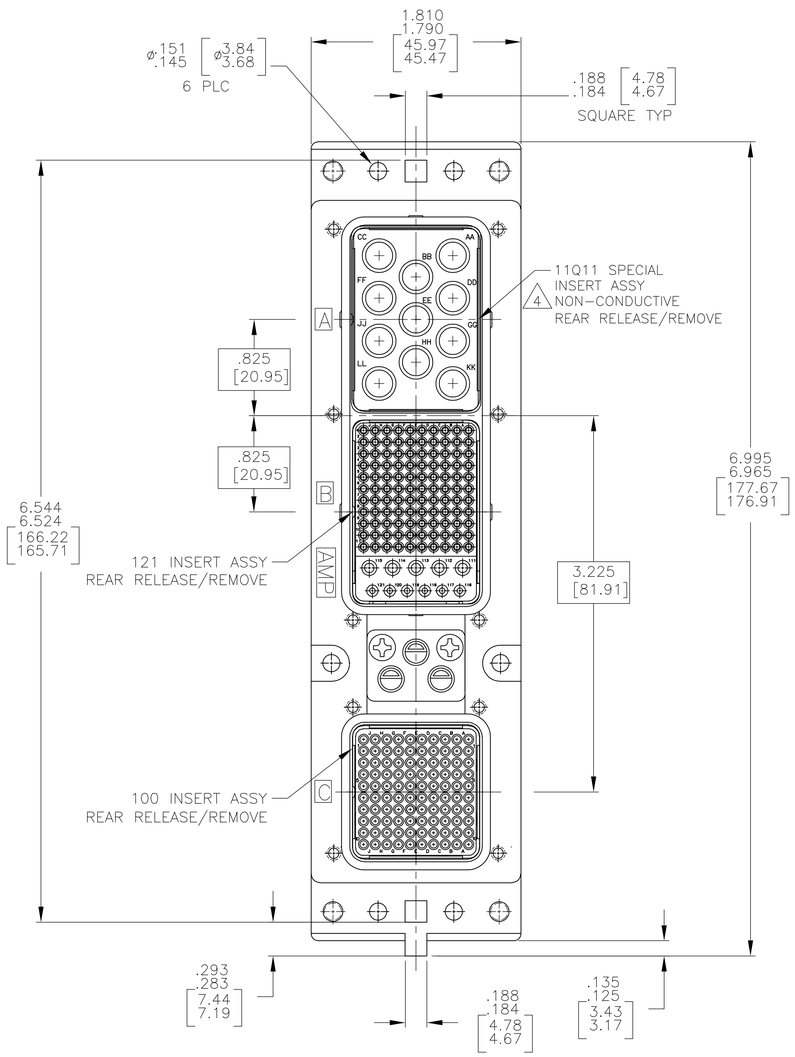

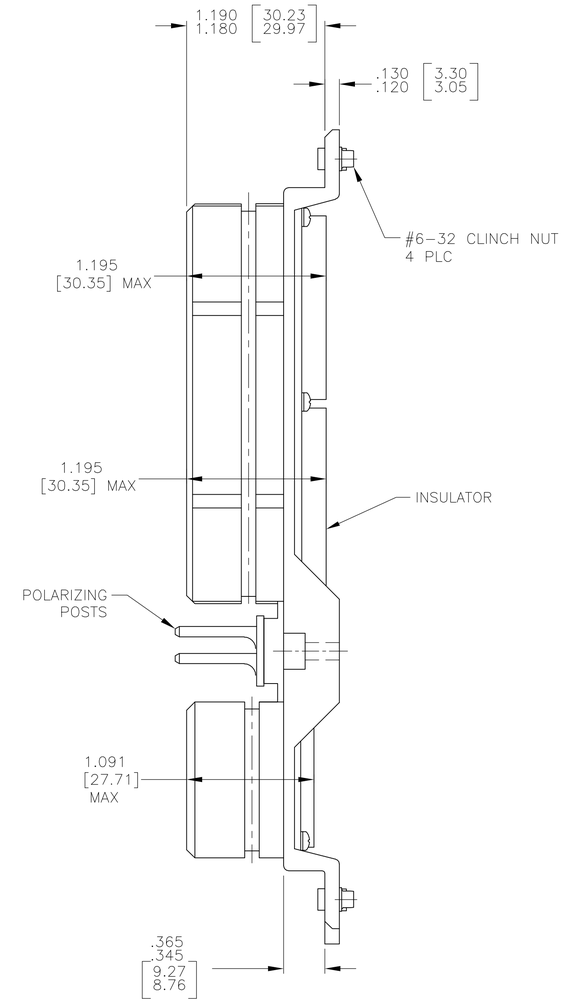

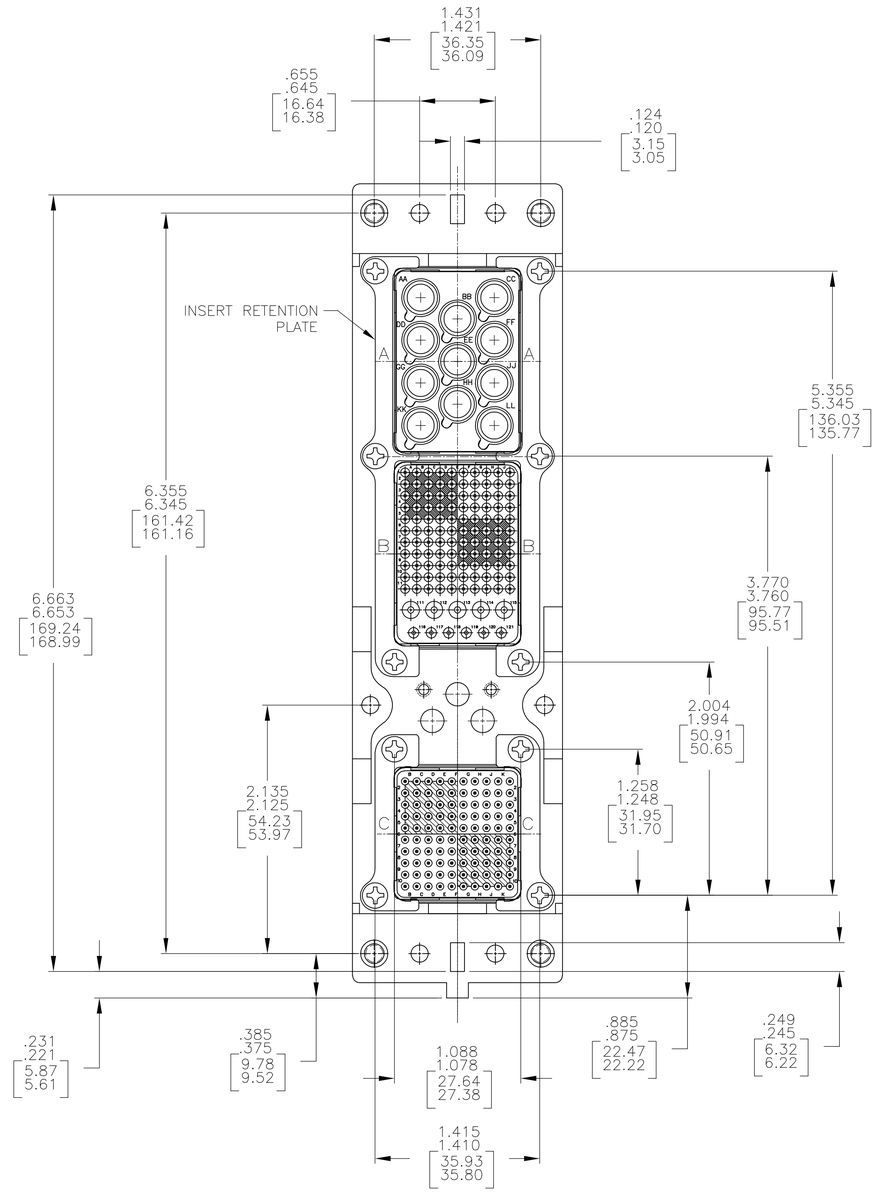

1. CONNECTOR DIMENSIONS ARE PER ARINC 600 SPECIFICATION
2. FOLLOWING CONTACTS ARE INCLUDED AND NOT LOADED:
   P/N 208262-3; SIZE 22 CRIMP PIN CONTACT; QTY = 210.
   P/N 208267-2; SIZE 20 CRIMP SOCKET CONTACT; QTY = 6.
   P/N 208270-2; SIZE 16 CRIMP SOCKET CONTACT; QTY = 5.
   P/N 1218820-1; SIZE 8 COAX SOCKET CONTACT; QTY = 6
   P/N 222191-5; SIZE 8 TWINAX SOCKET CONTACT; QTY = 2
   P/N 1445693-1; SIZE 8 QUADRAX SOCKET CONTACT; QTY = 2
3. KEYING SHOWN IN POSITION "01" FOR REFERENCE ONLY.
   SEE TABLE FOR KEYING POSITION.
   FOR POSITION "00" KEYING SHIPPED UNASSEMBLED.

4 SIZE 8 CONTACTS ARE ELECTRICALLY ISOLATED.

COMPONENT	MATERIAL	FINISH
SHELL	DIE CAST ALUMINUM PER ASTM-B-85	ELECTROLESS NICKEL PER MIL-C-26074, CLASS 4, GRADE B
RETENTION PLATES	ALUMINUM ALLOY PER ASTM-B-209	ELECTROLESS NICKEL PER MIL-C-26074, CLASS 4, GRADE B
SCREWS AND LOCKWASHERS	STEEL OR STAINLESS STEEL	CHROMATE OVER ZINC OR PASSIVATED
POLARIZING POSTS	ZINC ALLOY PER ASTM-B-86	ELECTROLESS NICKEL PER MIL-C-26074, CLASS 4, GRADE B
POLARIZING POST RETAINING PLATE	ALUMINUM ALLOY PER ASTM-B-209	BLUE ANODIZED PER MIL-A-8625
11Q11 INSERT	THERMOPLASTIC	-
121 & 100 INSERTS	THERMOSET	-

01	1757739-1
KEYING POSITION	PART NUMBER

THIS DRAWING IS A CONTROLLED DOCUMENT.

DIMENSIONS: INCHES

TOLERANCES UNLESS OTHERWISE SPECIFIED:
0 PLC ± -
1 PLC ± -
2 PLC ± -
3 PLC ± -
4 PLC ± -
ANGLES ± -

MATERIAL: SEE TABLE
FINISH: SEE TABLE

DWN C.C.THOMAS 5-2-05
CHK K.HOGAN 5-3-05
APVD K.HOGAN 5-3-05
PRODUCT SPEC —
APPLICATION SPEC —
WEIGHT —

AMP — Tyco Electronics Corporation, Harrisburg, Pa 17105-3608

NAME: PLUG ASSY,SIZE 2,ARINC 600 (11Q11 SPCL/121/100)

SIZE	CAGE CODE	DRAWING NO	RESTRICTED TO
A1	00779	C-1757739	—

CUSTOMER DRAWING | SCALE 1.5:1 | SHEET 1 OF 1 | REV A