THIS DRAWING IS UNPUBLISHED. RELEASED FOR PUBLICATION OCT ,2005.
© COPYRIGHT 2005 TE Connectivity Ltd. ALL RIGHTS RESERVED.

REVISIONS

P	LTR	DESCRIPTION	DATE	DWN	APVD
	A1	ECR-18-009566	20JUN2018	GCM	CB

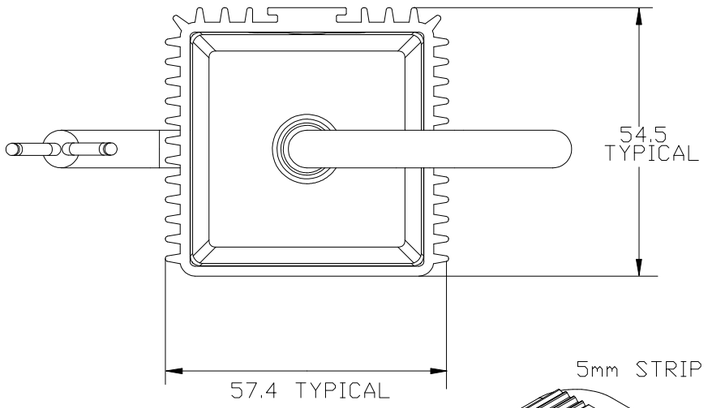

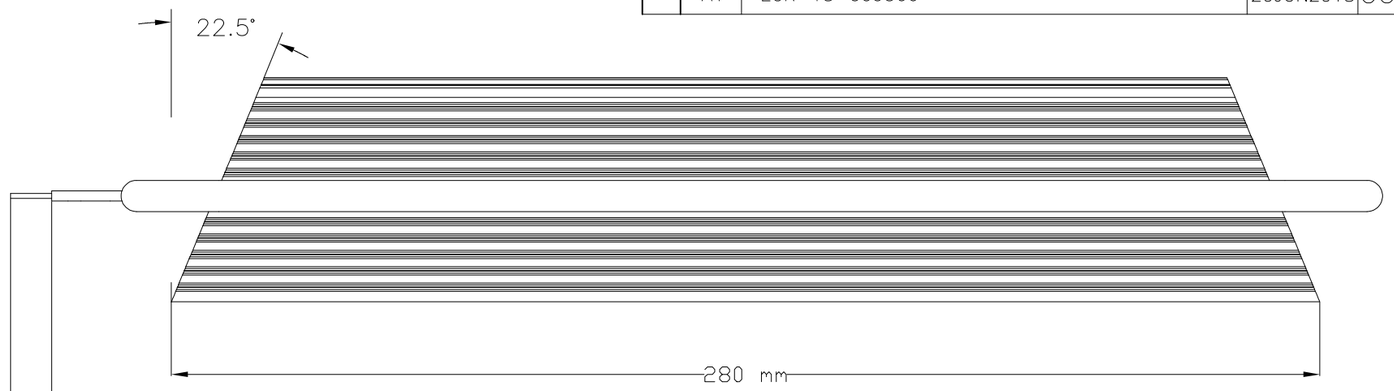

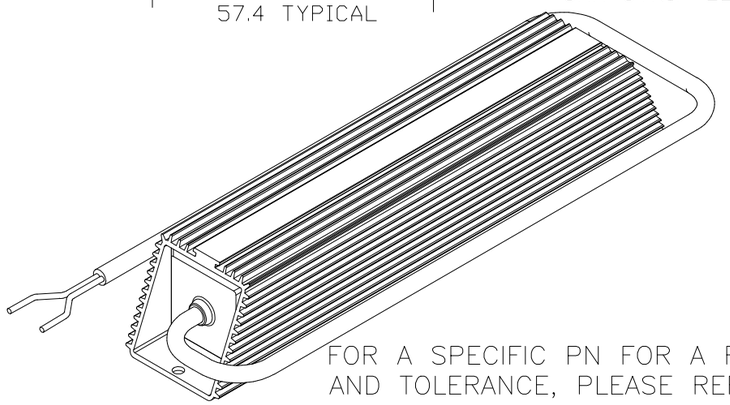

FOR A SPECIFIC PN FOR A RESISTANCE VALUE AND TOLERANCE, PLEASE REFER TO DMF.

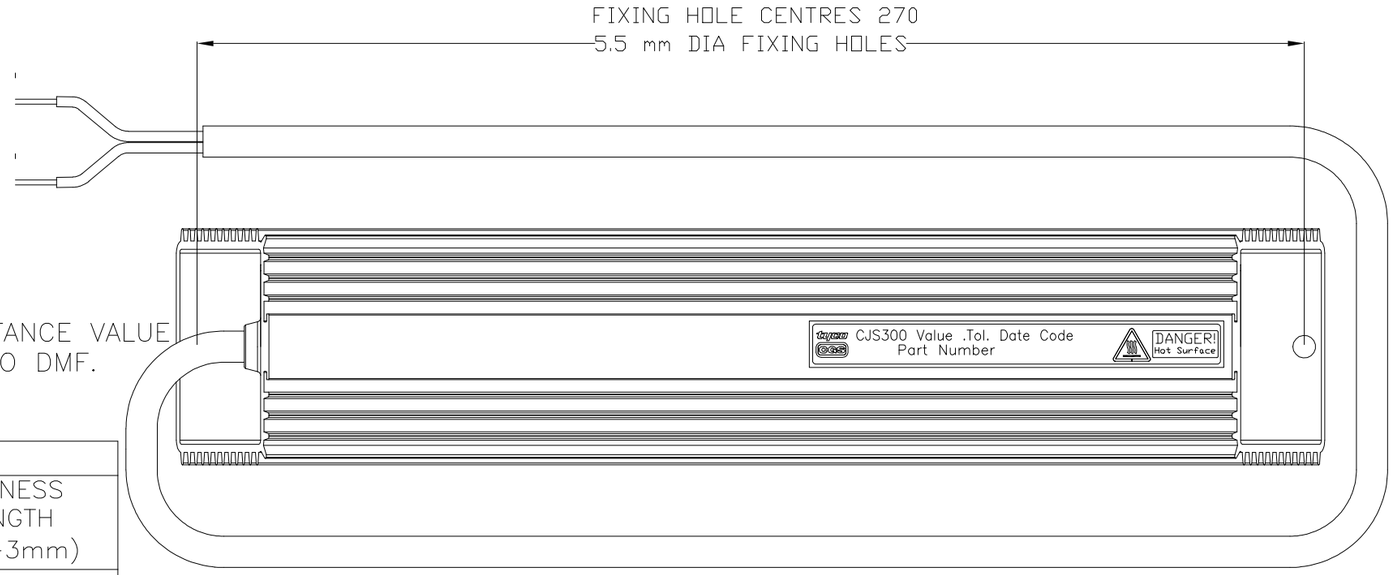

SCHEDULE

ITEM NO.	TE PART NO	MEC PART NO	DESCRIPTION	HARNESS LENGTH (+/-3mm)
1	1676040-1	CJS300330RJ	CJS300 330R 5%	1000
2	1676040-2	CJS30018RJ	CJS300 18R 5%	1000
3	1676040-3	CJS30037R5J	CJS300 37R5 5%	1000
4	1676040-4	CJS30068RJ	CJS300 68R 5%	1000
5	1676040-5	CJS30022RK	CJS300 10R 10%	1000
6	1676040-6	CJS30037R5J2M	CJS300 37R5 5% 2M	2000

CABLE: Silicone Rubber Insulated
2 core x 30/0.25mm nickel plated copper conductors
Inner cores R.T.I. 0.6mm Grade GPC – Colour Blue
Outer sheath to O.D. 6.7mm Grade GPC – Colour Black
CONTACT TYCO FOR INFORMATION ON CABLE LENGTH

RoHS Compliant

THIS DRAWING IS A CONTROLLED DOCUMENT.

DIMENSIONS: INCHES

TOLERANCES UNLESS OTHERWISE SPECIFIED:
0 PLC ± –
1 PLC ± –
2 PLC ± –
3 PLC ± –
4 PLC ± –
ANGLES ± –

MATERIAL –

FINISH –

DWN DAVE KENEDY 19OCT05
CHK J.CATCHPOLE 20OCT05
APVD J.CATCHPOLE 20OCT05
PRODUCT SPEC —
APPLICATION SPEC —
WEIGHT

TE Connectivity

NAME CJS300 – –

SIZE	CAGE CODE	DRAWING NO	RESTRICTED TO
A3	00779	C-1676040	—

CUSTOMER DRAWING

SCALE	SHEET	REV
NTS	1 OF 1	A1

1470-19 (1/15)