THIS DRAWING IS UNPUBLISHED. RELEASED FOR PUBLICATION – –, .
© COPYRIGHT – By – ALL RIGHTS RESERVED.

LOC	DIST
H	—

REVISIONS

P	LTR	DESCRIPTION	DATE	DWN	APVD
	G	REVISED PER ECO–15–005333	07JUL2015	AP	RP

NOTES:

1. MATERIAL : – HOUSING : POLYESTER G.F.
   COLOUR : GREY.
   – CONTACTS : PHOSPHORBRONZE.
2. FINISH : –1 AT CONTACT AREA EIC 60603–2 PERFORMANCE LEVEL I OVER NICKEL.
   AT POST AREA 2.5µm Sn OVER 1.25µm Ni.
   –4 AT CONTACT AREA EIC 60603–2 PERFORMANCE LEVEL II OVER NICKEL.
   AT POST AREA 2.5µm Sn OVER 1.25µm Ni.
   –7 SAME AS –1 ONLY 2,0µm AU.
   –8 AT CONTACT AREA EIC 60603–2 PERFORMANCE LEVEL III OVER NICKEL.
   AT POST AREA 2.5µm Sn OVER 1.25µm Ni.
3. SOLDERPOSTS SUITABLE FOR 0,80±0,05 OR 1,0±0,1 NOM DIA HOLES.

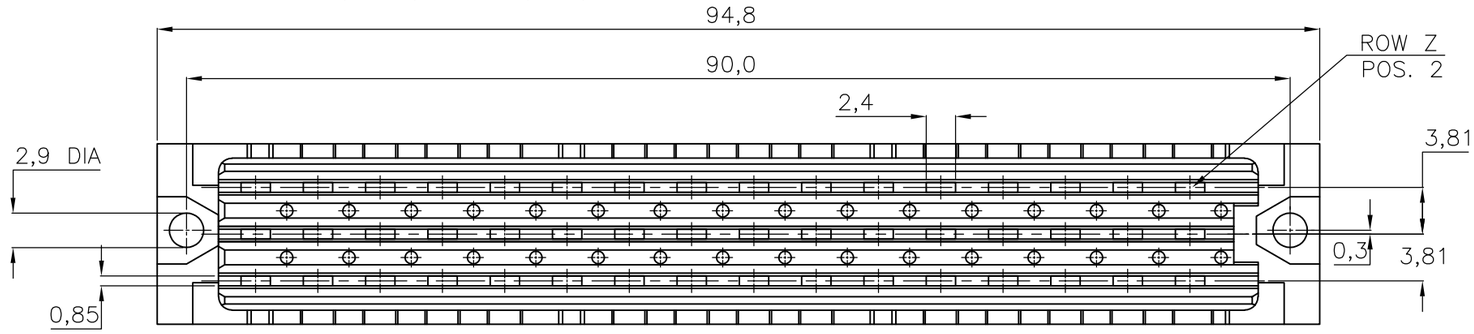

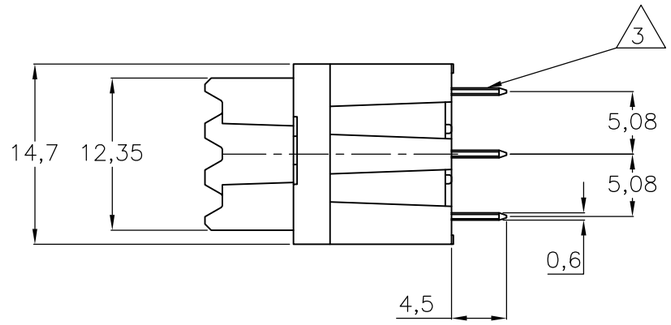

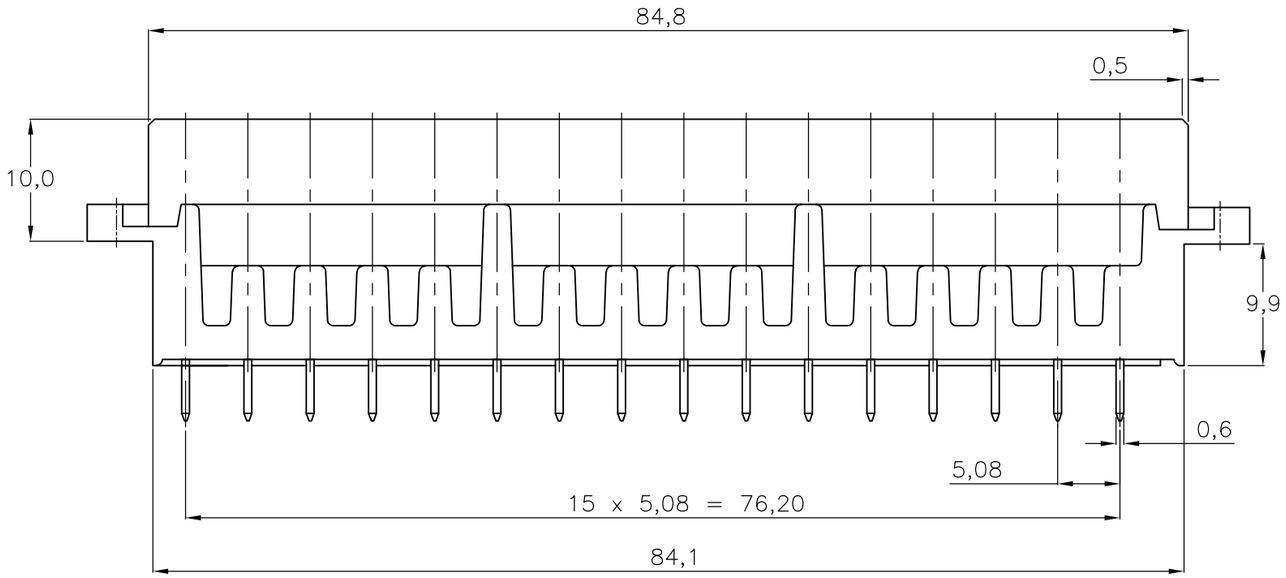

OBSOLETE	SEE NOTE 2	SEE NOTE 1	~~9–166733–4~~
OBSOLETE			~~166733–8~~
OBSOLETE			~~166733–7~~
			166733–4
			166733–1
	FINISH	MATERIAL	PARTNUMBER

POS	ROW z	ROW b	ROW d
32	X	X	X
30	X	X	X
28	X	X	X
26	X	X	X
24	X	X	X
22	X	X	X
20	X	X	X
18	X	X	X
16	X	X	X
14	X	X	X
12	X	X	X
10	X	X	X
8	X	X	X
6	X	X	X
4	X	X	X
2	X	X	X

AN ASTERISK ,,X'' DENOTES A CONTACT.

THIS DRAWING IS A CONTROLLED DOCUMENT.

DIMENSIONS: mm

TOLERANCES UNLESS OTHERWISE SPECIFIED:
0 PLC ± –
1 PLC ± –
2 PLC ± –
3 PLC ± –
4 PLC ± –
ANGLES ± –

MATERIAL –
FINISH –

DWN R.V.LOKVEN 28JUN91
CHK J.GIBBELS 27MAY97
APVD –
PRODUCT SPEC —
APPLICATION SPEC —
WEIGHT —

TE Connectivity

NAME
3x16 POS. TYPE F FEMALE
B. T. B. SOLDER CONNECTOR

SIZE	CAGE CODE	DRAWING NO	RESTRICTED TO
A3	00779	C–166733	—

CUSTOMER DRAWING

SCALE	SHEET	REV
NTS	1 OF 1	G