THIS DRAWING IS UNPUBLISHED. RELEASED FOR PUBLICATION -
C COPYRIGHT 2003 BY TYCO ELECTRONICS CORPORATION. ALL RIGHTS RESERVED.

LOC	DIST
A1	-

REVISIONS

P	LTR	DESCRIPTION	DATE	DWN	APVD
	G4	SEE PCN EGA0-1908-04-1	24AUG2004	M.K.	KR
	G5	SEE PCN EGA0-1927-04-1	25AUG2004	M.K.	KR
	H	SEE PCN EGA0-2426-04, CHROME 6 FREE	01NOV2004	GP	KR
	H1	EGA0-2768-04	10DEC2004	KR	GM

NOTES:
Bemerkungen:

1 TORQUEMOMENT FULLY POPULATED WITH TIN TERMINALS: 3.2Nm±0.5Nm
Drehmoment zum Schliessen der Kupplung mit verzinnten Kontakten bei Komplettbestueckung: 3.2Nm±0.5Nm

2 THE BOLT HEAD WILL SHEAR OFF AT A VALUE FROM 4.5Nm TO 5.9 Nm (H1)
Der Schraubenkopf wird in einem Bereich von 4.5 Nm bis 5.9 Nm abgeschert

3 TORQUEMOMENT FOR POWER TOOL: 7.0N m±1.1Nm
Drehmoment fuer Drehmomentschluessel: 7.0 Nm±1.1Nm

4 (triangle) WARPAGE DOWN TO 32.5mm PERMITTED
Einfall bis 32.5mm zulaessig

5 (triangle) FOR PN 1-1355992-1 THE SHOWN ASSY NUMBER ON PART WILL BE 0-1355992-1
Fuer PN 1-1355991-1 wird auf dem Teil die Assy Nummer 0-1355992-1 verwendet

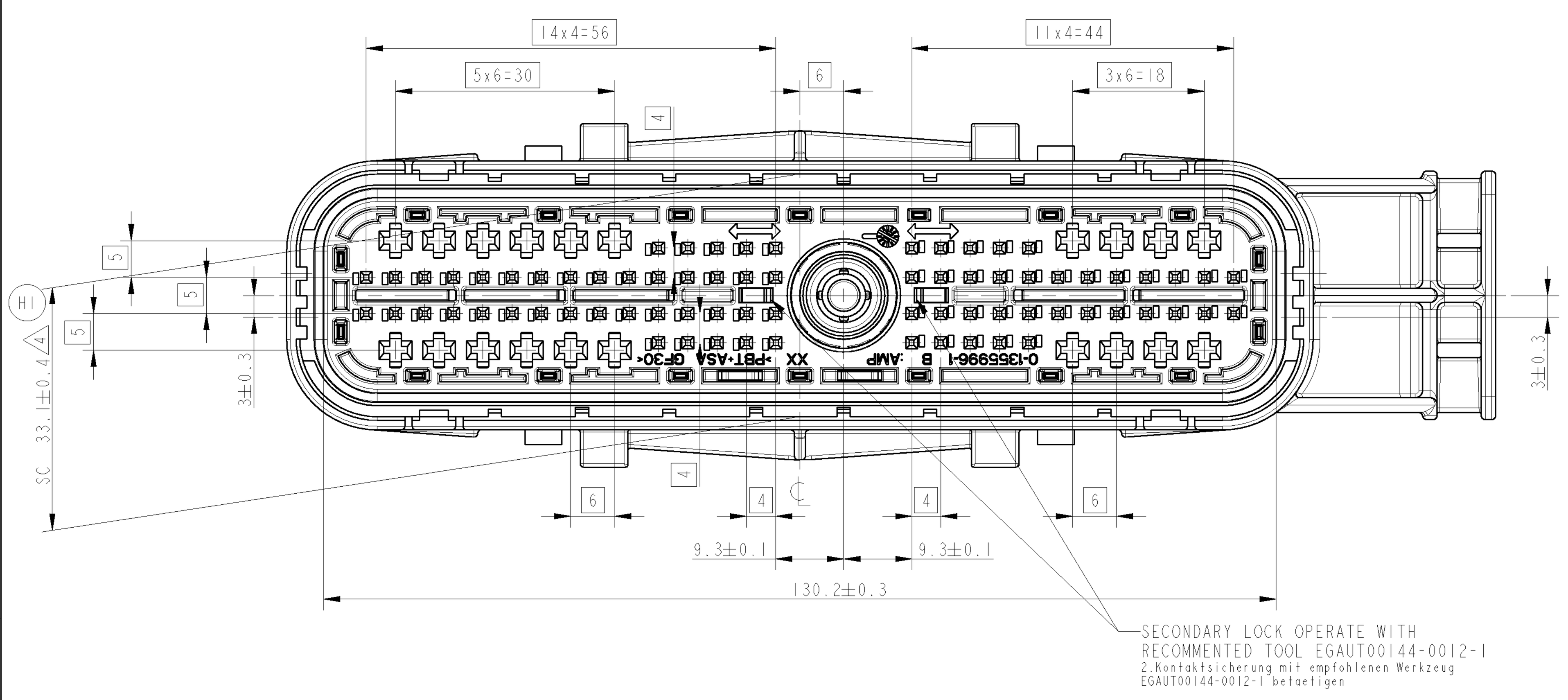

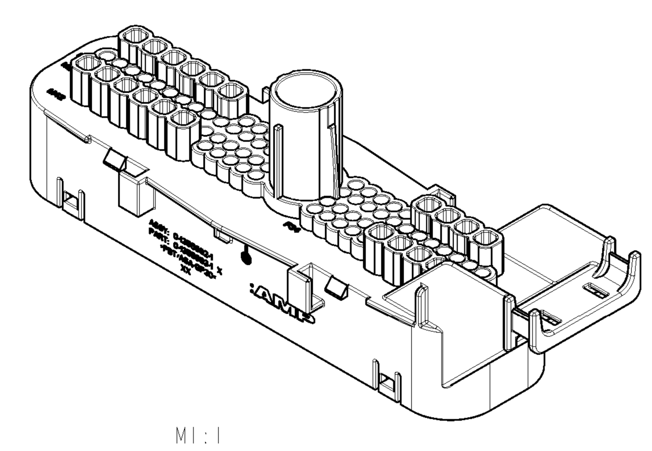

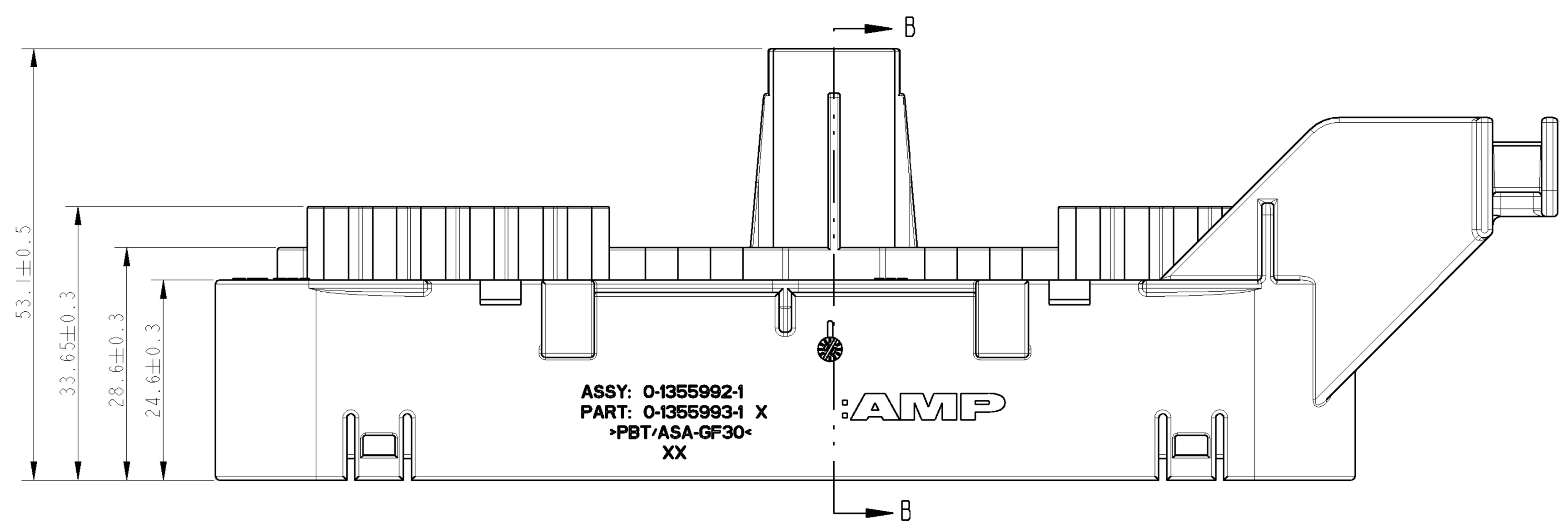

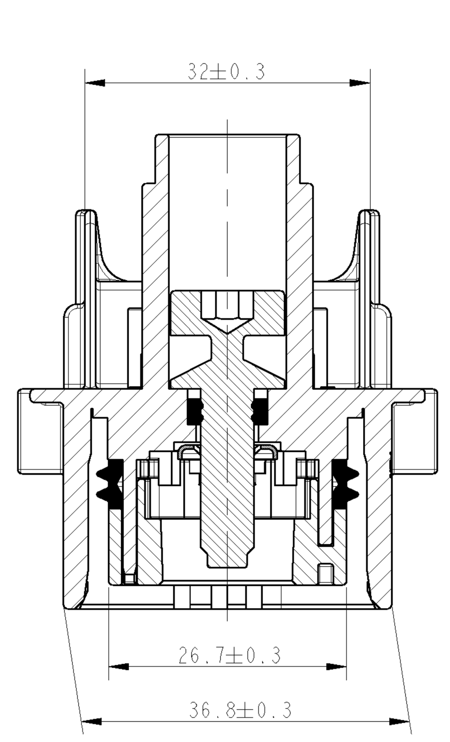

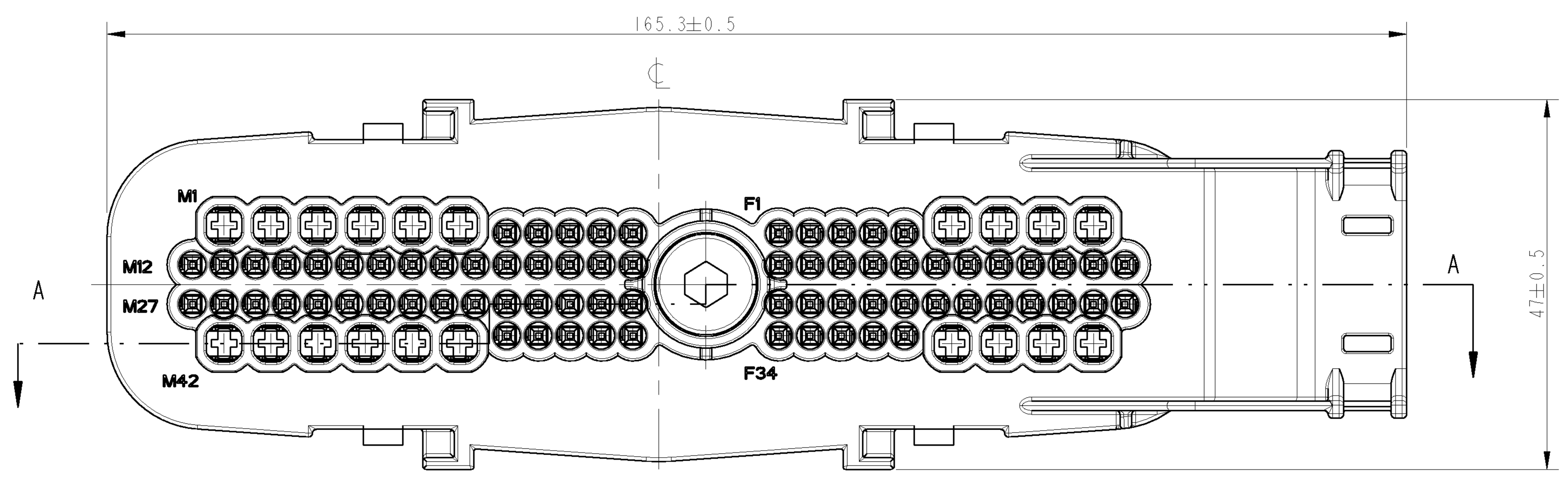

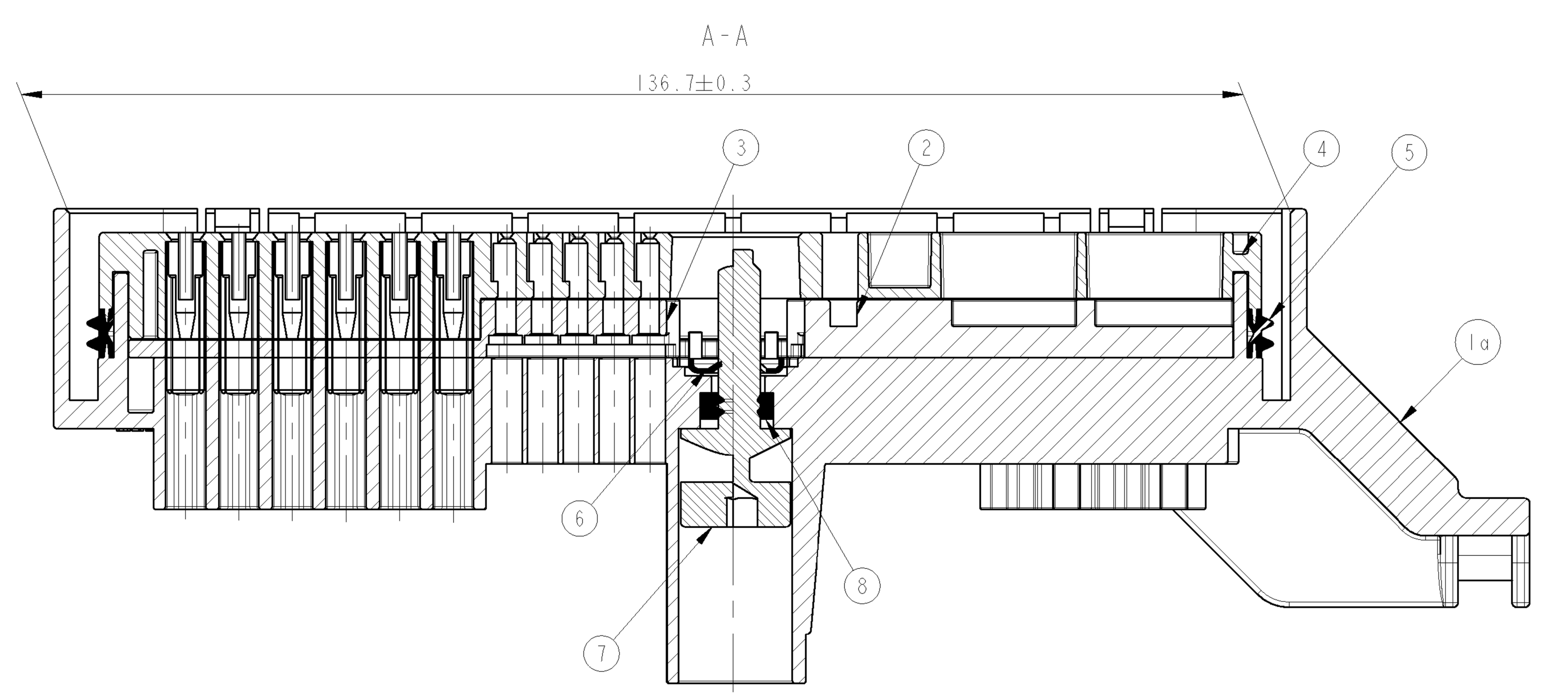

						MATED WITH	TYCO ASSY NO.	DESCRIPTION	
						0-1355989-1	1-1355992-1	94POS.SOCKET HOUSING (ALL CAV. OPEN) 5 (H1)	
						0-1355989-1	0-1355992-3	94POS.SOCKET HOUSING	
						0-1355989-1	0-1355992-2	94POS.SOCKET HOUSING	
						0-1355989-1	0-1355992-1	94POS.SOCKET HOUSING (ALL CAV. OPEN)	
						-	-	-	
1x	1x	1x	1x	-		RED	SILICONE	BOLT SEAL	8
1x	1x	-	-	-		NATURE	STEEL	BOLT TORX T30	7a
-	-	1x	1x	-		NATURE	STEEL	SHEAR BOLT (ALLEN SCREW)	7
1x	1x	1x	1x	-		NATURE	STEEL	NUT	6
1x	1x	1x	1x	-		RED	SILICONE	HOUSING SEAL	5
1x	1x	1x	1x	-		BLACK	PBT/ASA-GF30	CAVITY INSERT	4
1x	1x	1x	1x	-		NATURE	PA6.6	SPACER 52POS	3
1x	1x	1x	1x	-		NATURE	PA6.6	SPACER 42POS	2
-	1x	-	-	-		BLACK	PBT/ASA-GF30	SOCKET HOUSING	1c
-	-	1x	-	-		BLACK	PBT/ASA-GF30	SOCKET HOUSING	1b
1x	-	-	1x	-		BLACK	PBT/ASA-GF30	SOCKET HOUSING	1a
NO OF ITEM						COLOR	MATERIAL	DESCRIPTION	ITEM NO.

0-1355992-3

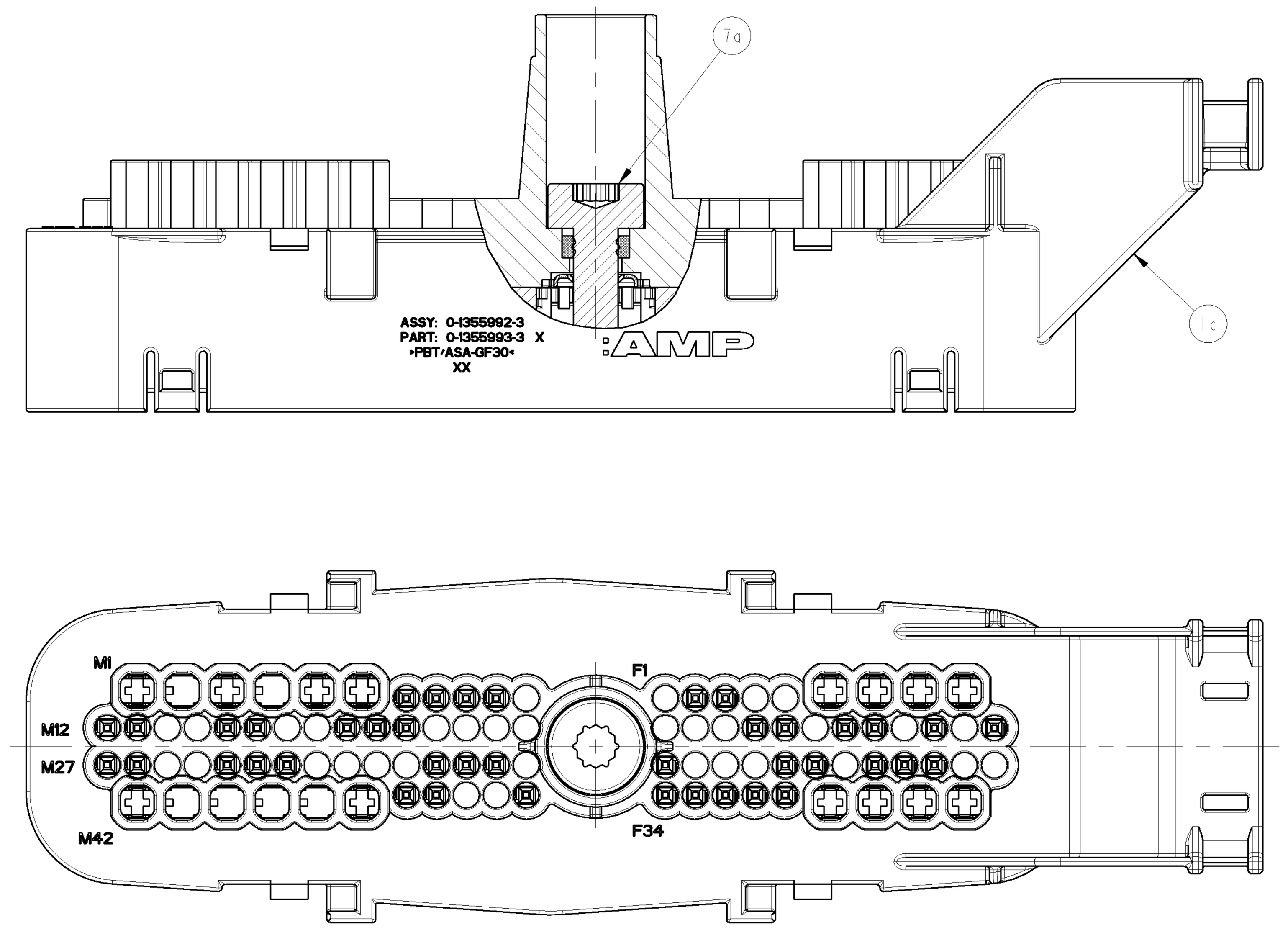

0-1355992-2

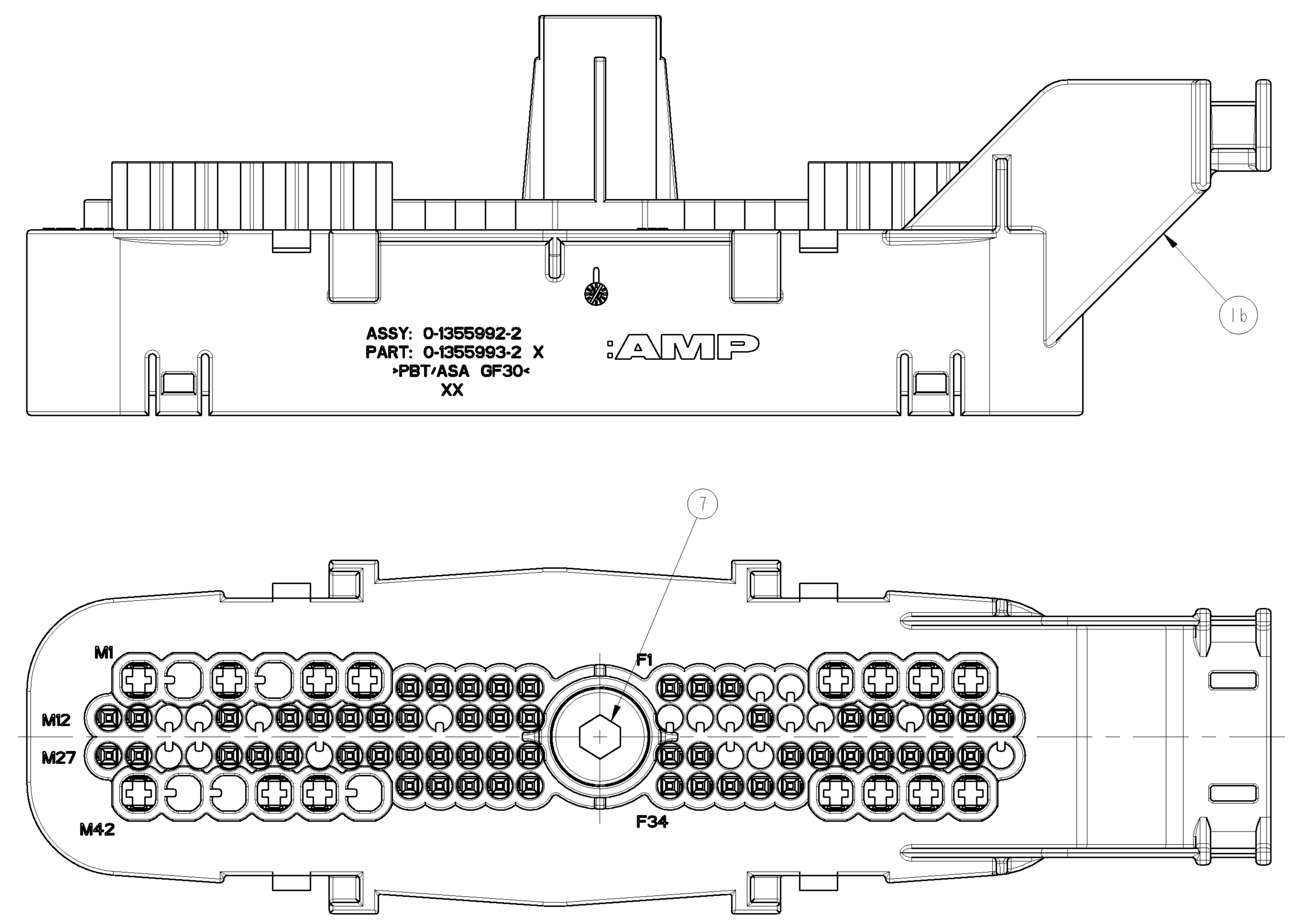

-1 AS SHOWN
wie gezeichnet

TYCO PN / tyco Nr.	M1	M2	M3	M4	M5	M6	M7	M8	M9	M10	M11	M12	M13	M14	M15	M16	M17	M18	M19	M20	M21	M22	M23	M24	M25	M26	M27	M28	M29	M30	M31	M32	M33	M34	M35	M36	M37	M38	M39	M40	M41	M42	M43	M44	M45	M46	M47	M48	M49	M50	M51	M52
0-1355992-3	X		X		X	X	X	X	X	X		X	X			X	X			X	X	X					X	X			X	X	X					X	X	X		X					X	X	X			X
0-1355992-2	X		X		X	X	X	X	X	X	X	X	X			X		X	X	X	X	X		X	X	X	X	X			X	X	X		X	X	X	X	X	X	X	X			X	X		X	X	X	X	X
0-1355992-1 1-1355992-1	X	X	X	X	X	X	X	X	X	X	X	X	X	X	X	X	X	X	X	X	X	X	X	X	X	X	X	X	X	X	X	X	X	X	X	X	X	X	X	X	X	X	X	X	X	X	X	X	X	X	X	X

TYCO PN / tyco Nr.	F1	F2	F3	F4	F5	F6	F7	F8	F9	F10	F11	F12	F13	F14	F15	F16	F17	F18	F19	F20	F21	F22	F23	F24	F25	F26	F27	F28	F29	F30	F31	F32	F33	F34	F35	F36	F37	F38	F39	F40	F41	F42
0-1355992-3		X	X			X	X	X	X				X	X		X	X		X		X	X				X	X		X	X	X			X	X	X	X	X	X	X	X	X
0-1355992-2	X	X	X			X	X	X	X				X			X	X		X	X	X	X	X			X	X	X	X	X	X	X		X	X	X	X	X	X	X	X	X
0-1355992-1 1-1355992-1	X	X	X	X	X	X	X	X	X	X	X	X	X	X	X	X	X	X	X	X	X	X	X	X	X	X	X	X	X	X	X	X	X	X	X	X	X	X	X	X	X	X

BLANKED CAVITIES INDICATE CLOSED LOCATIONS / Leere Felder kennzeichnen geschlossene Kammern

WITH "X" MARKED CAVITIES INDICATE OPEN LOCATIONS / Makierte Felder mit "X" kennzeichnen offene Kammern

THIS DRAWING IS A CONTROLLED DOCUMENT FOR TYCO ELECTRONICS CORPORATION. IT IS SUBJECT TO CHANGE AND THE CONTROLLING ENGINEERING ORGANIZATION SHOULD BE CONTACTED FOR THE LATEST REVISION.

DIMENSIONS: mm

TOLERANCES UNLESS OTHERWISE SPECIFIED:
0 PLC ±0,3
1 PLC ±0,3
2 PLC ±0,3
3 PLC ±0,3
4 PLC ±0,3
ANGLES ±5°

MATERIAL -
FINISH -

DWN G.PUCKEL 14JUL2000
CHK D.JAKOBEIT 14JUL2000
APVD G.MUMPER 14JUL2000
PRODUCT SPEC -
APPLICATION SPEC -
WEIGHT -

tyco Electronics — tyco Electronics AMP GmbH, D - 64625 Bensheim

NAME: SOCKET HOUSING 94POS.MQS/MCP -

SIZE	CAGE CODE	DRAWING NO	RESTRICTED TO
A0	00779	C-1355992	-

CUSTOMER DRAWING — SCALE 2:1 — SHEET 1 OF 1 — REV H1