© 2022 TE Connectivity. All Rights Reserved.

| REVISIONS | | | | | |
|---|---|---|---|---|---|
| P | LTR | DESCRIPTION | DATE | DWN | APVD |
| | B10 | ECR-21-123594 | 22JAN2022 | RK | JB |

NOTES

1. MATERIAL:SEE THE TABLE
2. SURFACE:SEE THE TABLE
3. PACKAGING QUANTITY 5 PIECES IN A CARTON
4. WEIGHT:0.112 Kg (APROX)

~~PN 0-1~~

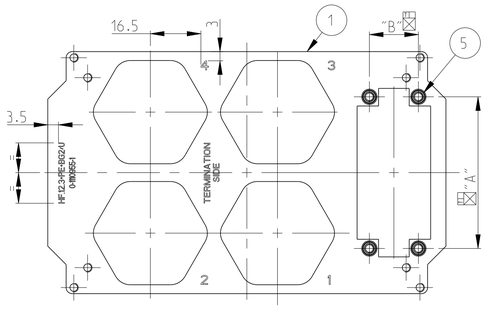


PN 0-5

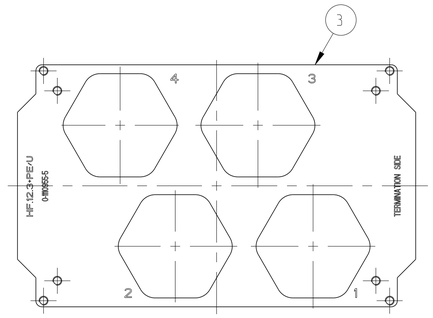


~~PN 0-2~~

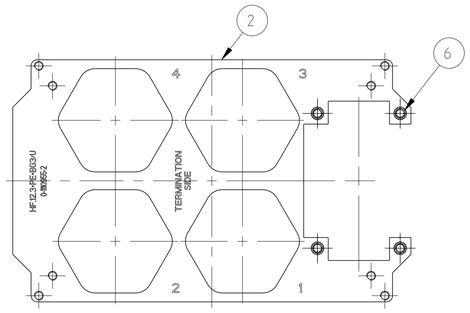


PN 0-6

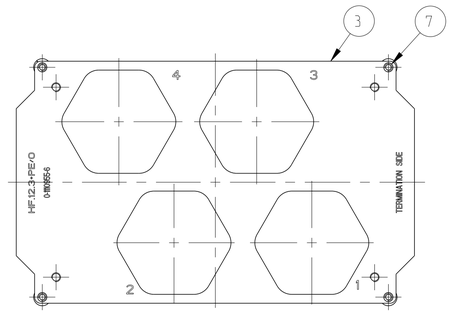


~~PN 0-3~~

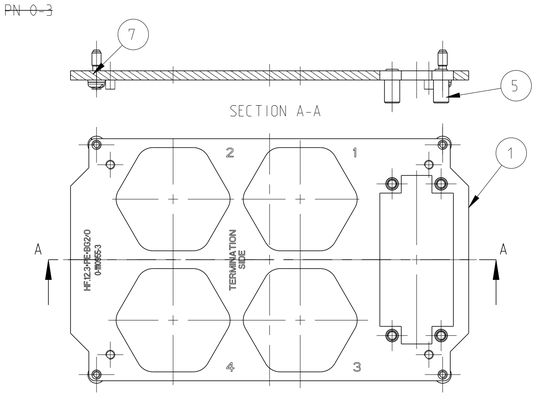


PN 0-7

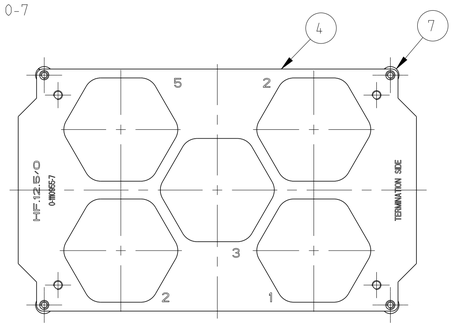


~~PN 0-4~~

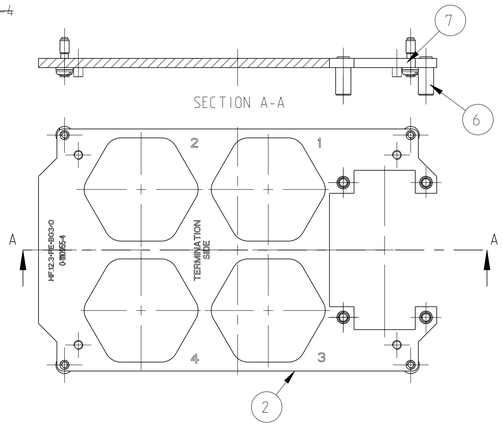


PN 0-8

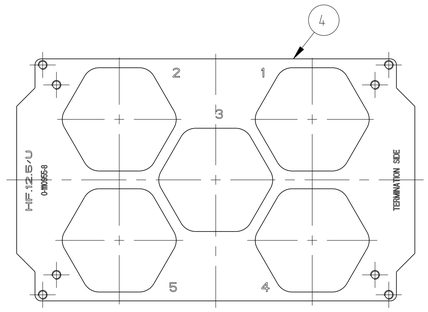


~~PN 0-1~~

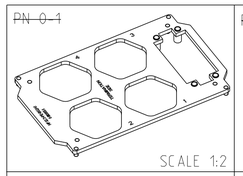


~~PN 0-2~~

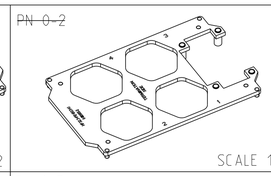


~~PN 0-3~~

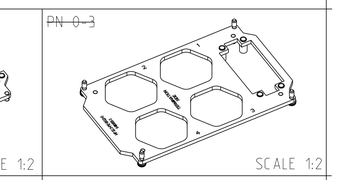


~~PN 0-4~~

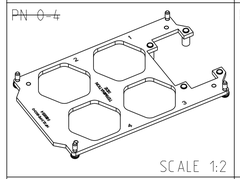


PN 0-5

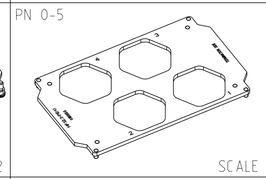


PN 0-6

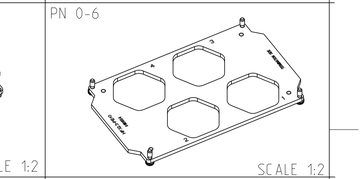


PN 0-7

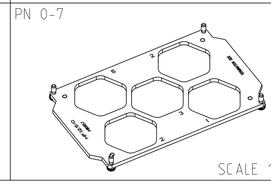


PN 0-8

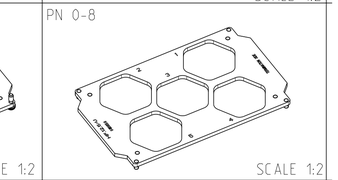


| 0-8 | 0-7 | 0-6 | 0-5 | ~~0-4~~ | ~~0-3~~ | ~~0-2~~ | 0-1 | DESCRIPTION | MATERIAL | SURFACE | A | B | ITEM NO | NOTES |
|---|---|---|---|---|---|---|---|---|---|---|---|---|---|---|
| | | | | | | | | | 1 | 2 | | | | |
| | | | | OBSOLETE | | | OBSOLETE | | | | | | | |
| | 4 | 4 | | 4 | 4 | | | FIXING SCREW | STEEL | NICKEL PLATED | | | 7 | M3x10.5 |
| | | | | 4 | | 4 | | THREAD SOCKET FOR INSERT | STEEL | ZINC PLATED | | | 6 | M3x12.5 |
| | | | | | 4 | | 4 | THREAD SOCKET FOR INSERT | STEEL | ZINC PLATED | | | 5 | M3x11 |
| 1 | 1 | | | | | | | FIXING PLATE | STEEL | ZINC PLATED | | | 4 | |
| | | 1 | 1 | | | | | FIXING PLATE | STEEL | ZINC PLATED | | | 3 | |
| | | | | 1 | | 1 | | FIXING PLATE | STEEL | ZINC PLATED | 44 | 27 | 2 | SIZE 3 |
| | | | | | 1 | | 1 | FIXING PLATE | STEEL | ZINC PLATED | 49.5 | 16 | 1 | SIZE 2 |

| | |
|---|---|
| ~~HF.12.3.PE+BG2/U~~ | 3 |
| HF.12.3+PE+BG3/U | 3 |
| HF.12.3+PE+BG2/O | 3 |
| HF.12.3+PE+BG3/O | 3 |
| HF.12.3+PE/U | 3 |
| HF.12.3+PE/O | 3 |
| HF.12.5/O | 3 |
| HF.12.5/U | 3 |

THIS DRAWING IS A CONTROLLED DOCUMENT.

DIMENSIONS: mm

TOLERANCES UNLESS OTHERWISE SPECIFIED: X-DIM ±0.5 X-DIM ±0.05-mm.2 DIM 0805-R0 X
0 PLC ±
1 PLC ±
2 PLC ±
3 PLC ±
4 PLC ±
ANGLES ±

MATERIAL 1

FINISH 2

| | | |
|---|---|---|
| DWN | SCHNEIDER | 06.09.2006 |
| CHK | H.BRAUN | 06.09.2006 |
| APVD | T.SCHNURPFEIL | 06.09.2006 |
| PRODUCT SPEC | 108-74XXX | |
| APPLICATION SPEC | 114-74XXX | |
| WEIGHT | 0.112 Kg | |

TE Connectivity

NAME: FIXING PLATE SERIES HF SIZE 12

| SIZE | CAGE CODE | DRAWING NO | RESTRICTED TO |
|---|---|---|---|
| A1 | 00779 | C-1110955 | - |

CUSTOMER DRAWING | SCALE 5:1 | SHEET 1 OF 1 | REV B10

4805 (3/13)