© 2024 TE Connectivity. All Rights Reserved.

PN 0-3; 0-6; 1-5; 0-9

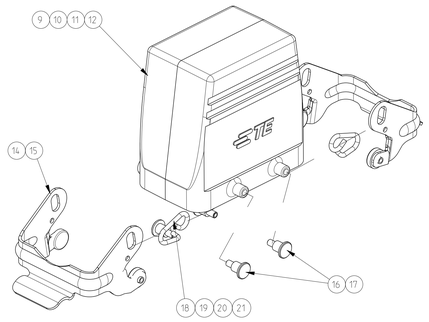

PN 2-6; 2-7

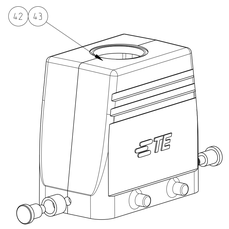

PN 0-8; 1-1

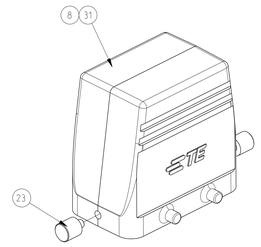

PN 2-0; 2-8

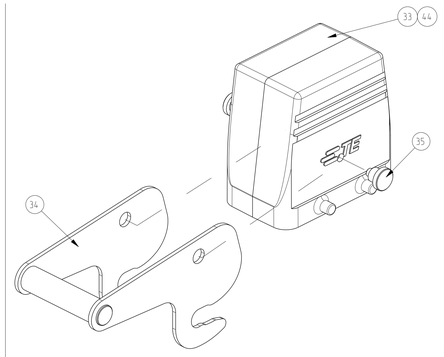

PN 0-2; 0-5; 1-6; 1-7; 1-8; 1-9; 2-3

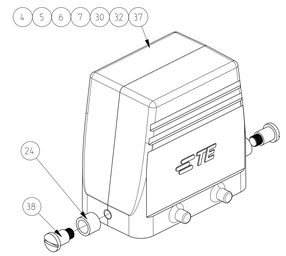

PN 0-7; 1-0

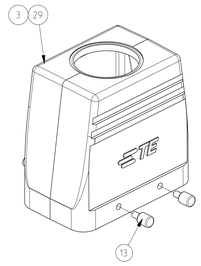

REVISIONS					
F	LTR	DESCRIPTION	DATE	DWN	APVD
	A18	ECR-16-016696	29AUG2017	GCM	MKO
	A19	ECR-17-014013	26MAR2018	SG	MKO
	A20	ECR-21-123564	28JUL2022	RK	JB
	A21	REVISED PER ECR-24-201358	18APR2024	RK	WR

NOTES:

1 PACKAGING QUANTITY 5 PIECES

⚠ SPECIAL PACKAGING QUANTITY 50 PIECES

3 VARNISH ON THE INSIDE NOT NECESSARY

PN 2-5

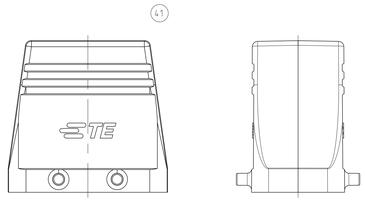

PN 0-4; 0-5; 1-7; 0-6; 1-5; 1-1; 1-9; 2-0; 2-2; 2-3; 2-4

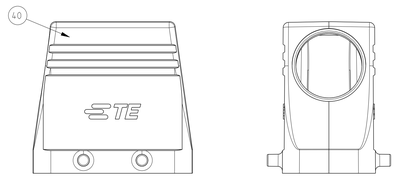

PN 1-4

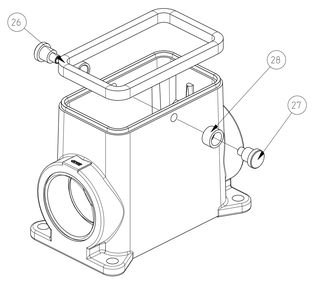

PN 0-1; 0-4; 2-1; 2-2

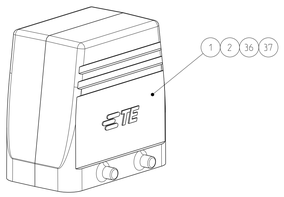

2-8	2-7	2-6	2-5	2-4	2-3	2-2	2-1	2-0	1-9	1-1	1-8	1-0	1-4	0-9	1-5	0-6	0-3	0-8	1-7	1-6	0-5	0-2	0-7	0-4	0-1	DESCRIPTION	MATERIAL	SURFACE	COLOR	ITEM NO.	NOTES
																										OBSOLETE					
																										OBSOLETE					
																										OBSOLETE					
																										OBSOLETE					
																										OBSOLETE					
																										OBSOLETE					
1																										HD/HOOD	ALUMINIUM/ALU			44	WITHOUT LOGO/DRILLING
	1																									HD/HOOD	ALUMINIUM/ALU	SurTec 650	BLANC	43	
		1																								HD/HOOD	ALUMINIUM/ALU	SurTec 650	BLANC	42	
			1																							HD/HOOD	ALUMINIUM/ALU		GREY RAL 7001	41	WITHOUT HTS LOGO
				1																						HD/HOOD	ALUMINIUM/ALU		GREY RAL 7001	40	WITHOUT HTS LOGO
					1																					HD/HOOD	ALUMINIUM/ALU		GREY RAL 7001	39	
					2				2		2								2	2	2	2				CLIP BOLT	STEEL	ZINC COATED	BLUE	38	M5
						1																				HD/HOOD	ALUMINIUM/ALU		GREY RAL 7001	37	WITHOUT HTS LOGO
							1																			HD/HOOD	ALUMINIUM/ALU		GREY RAL 7001	36	WITHOUT HTS LOGO
2								2																		CENTRAL LOCKING CLIP POSITIONER	STEEL	ZINC COATED	BLUE	35	
1								1																		CENTRAL LOCKING CLIP	STEEL	ZINC COATED	BLUE	34	
								1																		HD/HOOD	ALUMINIUM/ALU		GREY RAL 7001	33	
									1																	HD-EMV/HOOD	ALUMINIUM/ALU	SurTec 650	BLACK RAL 9005	32	
										1																HD-K/HOOD	ALUMINIUM/ALU	ALUMINIUM OXIDE	BLACK RAL 9005	31	
											1															HD/HOOD	ALUMINIUM/ALU		GREY RAL 7001	30	WITHOUT HTS LOGO
												1														HD-K/HOOD	ALUMINIUM/ALU	ALUMINIUM OXIDE	BLACK RAL 9005	29	
													2													SLIDE SPOOL	STEEL	ZINC COATED	BLUE	28	
													2													CLIP BOLT	STEEL	ZINC COATED	BLUE	27	
													1													PROFILE SEAL	NEOPRENE		BLACK	26	
													1													HD/HOOD	ALUMINIUM/ALU		GREY RAL 7001	25	
	2	2			2				2		2								2	2	2	2				SLIDE SPOOL	STEEL	ZINC COATED	BLUE	24	
										2								2								CLIP BOLT	V2A/STAIN.STEEL	BLANK		23	
	2	2																								CLIP BOLT	STEEL	ZINC COATED	BLUE	22	
														2												CLIP SPRING RIGHT	V2A/STAIN.STEEL	BLANK		21	
															2	2	2									CLIP SPRING RIGHT	STEEL	ZINC COATED	BLUE	20	
														2												CLIP SPRING LEFT	V2A/STAIN.STEEL	BLANK		19	
															2	2	2									CLIP SPRING LEFT	STEEL	ZINC COATED	BLUE	18	
														4												CLIP POSITIONER	V2A/STAIN.STEEL	BLANK		17	
															4	4	4									CLIP POSITIONER	STEEL	ZINC COATED	BLUE	16	
														2												LOCKING CLIP	V2A/STAIN.STEEL	BLANK		15	
															2	2	2									LOCKING CLIP	STEEL	ZINC COATED	BLUE	14	
												4											4			CLIP BOLT	V2A/STAIN.STEEL	BLANK		13	
														1												HD-K/HOOD	ALUMINIUM/ALU	ALUMINIUM OXIDE	BLACK RAL 9005	12	
															1											HD/HOOD	ALUMINIUM/ALU		GREY RAL 7001	11	
																1										HD/HOOD	ALUMINIUM/ALU		GREY RAL 7001	10	
																	1									HD/HOOD	ALUMINIUM/ALU		GREY RAL 7001	9	
																		1								HD-K/HOOD	ALUMINIUM/ALU	ALUMINIUM OXIDE	BLACK RAL 9005	8	
																			1							HD/HOOD	ALUMINIUM/ALU		GREY RAL 7001	7	WITHOUT HTS LOGO
																				1						HD/HOOD	ALUMINIUM/ALU		GREY RAL 7001	6	WITHOUT HTS LOGO
																					1					HD/HOOD	ALUMINIUM/ALU		GREY RAL 7001	5	
																						1				HD/HOOD	ALUMINIUM/ALU		GREY RAL 7001	4	
																							1			HD-K/HOOD	ALUMINIUM/ALU	ALUMINIUM OXIDE	BLACK RAL 9005	3	
																								1		HD/HOOD	ALUMINIUM/ALU		GREY RAL 7001	2	
																									1	HD/HOOD	ALUMINIUM/ALU		GREY RAL 7001	1	
																										~~HD24.STO.1.M32.G~~					
																										HD24.STS.1.M32.G					
																										HD-K24.STO.1.M32.G					
																										~~HD24.STO-GR.1.M32.G~~					
																										HD24.STS-GR.1.M32.G					
																										HD24.STO-GR.1.M32.G					
																										HD24.STS-GR.1.M32.G					
																										HD-K24.STO-GR.1.M32.G					
																										~~HD24.STO-VS.1.M32.G~~					
																										~~HD24.STS-VS.1.M32.G~~					
																										~~HD24.STS-VS.1.M25.G~~					
																										~~HD-K24.STS-VS.1.M32.G~~					
																										~~HD-Z24.SG.ZVGR.2.M32.Z~~					
																										HD-K24.STS.1.M32.G					
																										~~HD24.ST-GR~~					
																										HD-K24.STS-GR.1.M32.G					
																										~~HD-EMV24.STS.1.M32.G~~					
																										~~HD-Z24.STS-ZB.1.M25.G~~					
																										~~HD24.STO.1.M32.G~~					
																										~~HD24.STS.1.M32.G~~					
																										~~HD24.STS-GR.1.M25.G~~					
																										~~HD-Z24.STS.1.M32.G~~					
																										~~HD-Z24.ST-F~~					
																										~~HD-EMV.Z4.STO-GR.M25.G~~					
																										~~HD-EMV.Z4.STO-GR.2.M25.G~~					
																										~~HD-Z.24.ST-ZB~~					

THIS DRAWING IS A CONTROLLED DOCUMENT.	DWN Schneider 18.06.2002	TE Connectivity	
DIMENSIONS: mm	CHK Schweiger 18.06.2002	NAME HOOD HD 24	
TOLERANCES UNLESS OTHERWISE SPECIFIED: 0 PLC ±- 1 PLC ±- 2 PLC ±- 3 PLC ±- 4 PLC ±- ANGLES ±1°	APVD -		
	PRODUCT SPEC -		
	APPLICATION SPEC -		
MATERIAL - material_2	FINISH - finish_spec_2	WEIGHT -	SIZE A0 / CAGE CODE 00779 / DRAWING NO C-1106434 / RESTRICTED TO -
	CUSTOMER DRAWING	SCALE 5:1 / SHEET 1 OF 1	REV A21

4806 (3/13)