© TE Connectivity. All Rights Reserved.
VERTRAULICHE UNVERÖFFENTLICHTE ZEICHNUNG
FREI FUER VEROEFFENTLICHUNG
ALLE RECHTE VORBEHALTEN

MATED WITH:
PASSEND ZU:
HA 16

REVISIONS AENDERUNGEN					
P	LTR	DESCRIPTION BESCHREIBUNG	DATE	DWN	APVD
	D8	REVISED PER ECN-24-266180	20AUG2024	RK	WR

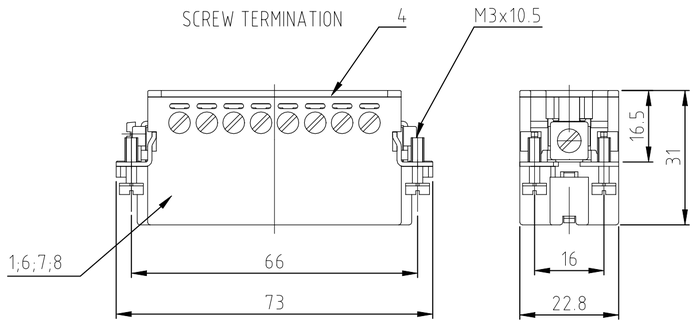

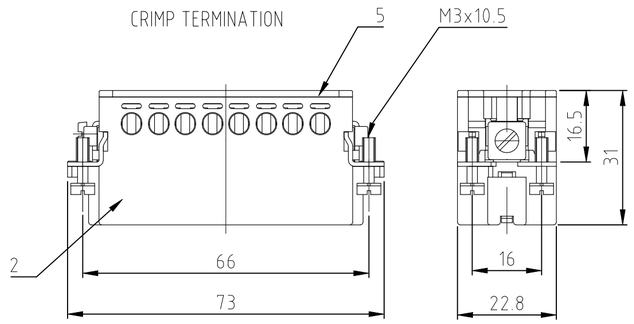

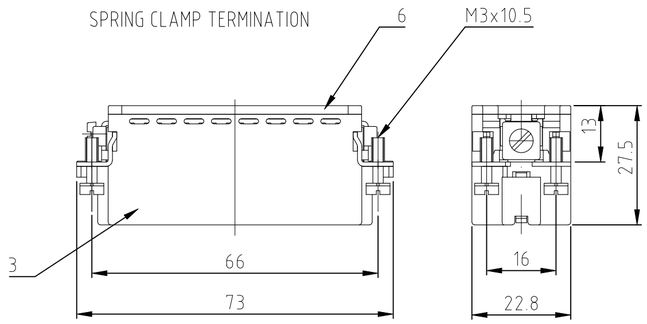

Contact arrangement / view from termination side

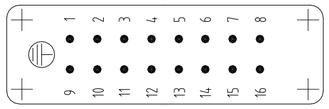

Contact arrangement / view from termination side

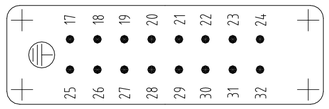

Contact arrangement / view from termination side

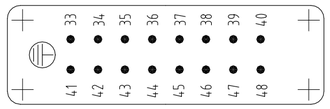

Contact arrangement / view from termination side

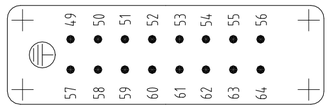

Panel cut-out for contact insert

when used without housing

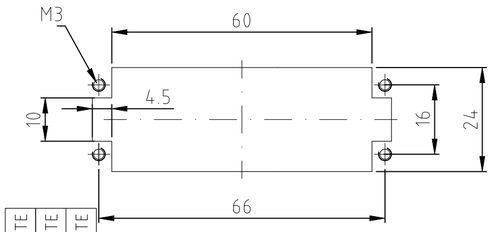

Assembling instruction

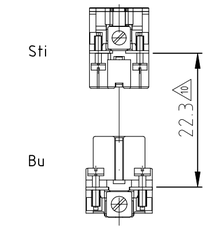

(10) DISTANCE FOR SAFETY CONTACT MARKING MAX. 24 mm

NOTES:

1 SUITABLE CRIMP CONTACTS: SERIES HE/HA
OUTER DIMENSIONS OF INSULATION: MAX. ϕ3,2 MM

(2) SUITABLE HOOD SIZE 5; 7; 9; 11: SERIES HA; HD
SUITABLE INSERTION AND EXTRACTION TOOL:
SCREWDRIVER 0,5x3 DIN 5264

(3) Strip lenght: Screw conection 10mm
Spring clamp conection 10mm Crimp conection 7.5mm

(4) STANDARDS:
DIN EN 61984; DIN EN 60664-1

(5) PACKAGING:
5 SETS IN A CARTON, PRE-MOUNTED

(6) SPECIAL PACKAGING: Krauss-Maffei
PACKAGING UNIT: 300 PIECES

(7) SPECIAL PACKAGING: Krauss-Maffei
PACKAGING UNIT: 150 PIECES

(8) SPECIAL PACKAGING: AIS
PACKAGING UNIT: 250 PIECES

(9) SPECIAL PACKAGING: WIELAND
PACKAGING UNIT: 100 PIECES

SEE TE CONNECTIVITY QUALITYMANAGEMENT PROCEDURE NO. 1.12

ORDERING TEXT / BESTELLTEXT	(5)	(6)	(7)	(8)	(9)	(9)	(9)	(9)	(9)	(9)	(9)	(9)	(9)	(9)	(9)	(9)	(9)	(9)	(9)	(9)	(9)	(9)	(9)	(9)	DESCRIPTION / BENENNUNG	MATERIAL	COLOR / FARBE	ITEM NO. POS.	REMARKS / BEMERKUNGEN
																			OBSOLETE	OBSOLETE	OBSOLETE								
																			OBSOLETE	