© 2024 TE Connectivity. All Rights Reserved.

PN 1-1 & 9-1

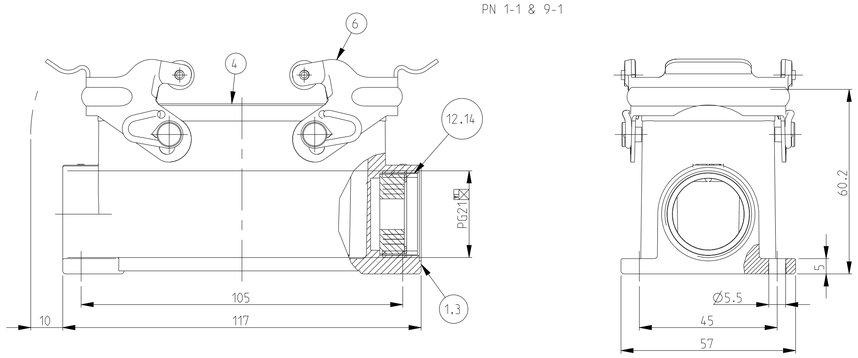

PN 1-8

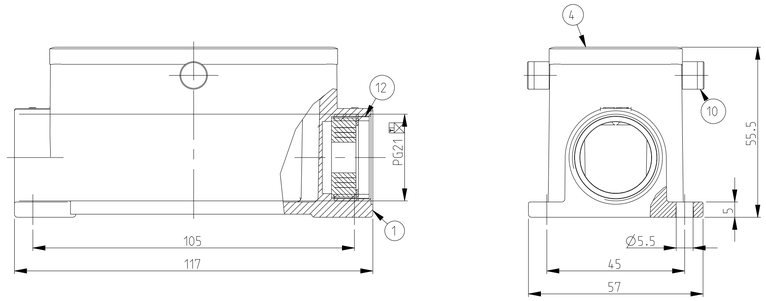

PN 2-1

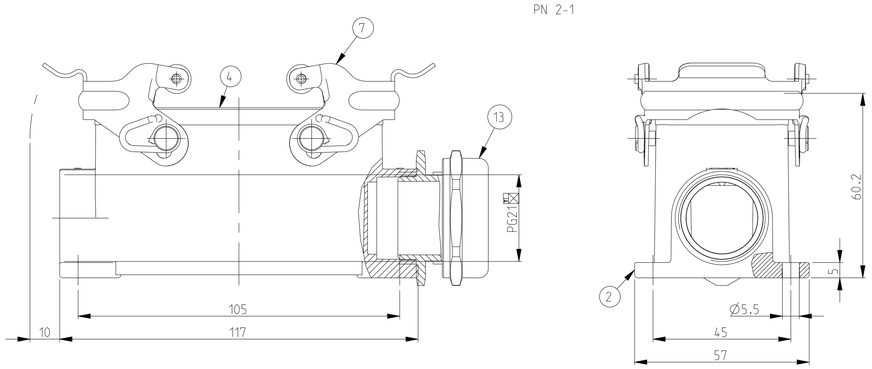

PN 1-2

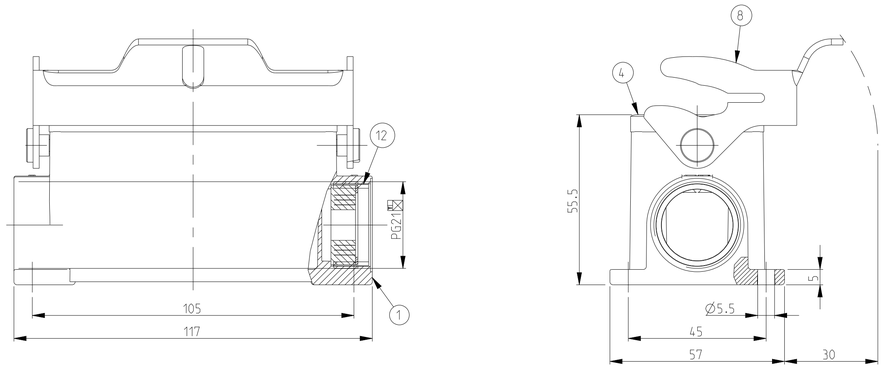

REVISIONS

P	LTR	DESCRIPTION	DATE	DWN	APVD
	A4	REVISED PER ECO-09-027197	16DEC2009	KK	AEG
	A5	ECR-16-016768	15NOV2017	GR	MKO
	A6	REVISED PER ECN-24-266180	21AUG2024	RK	WR

NOTES.

1 Material:Housing:Aluminium Diecasting Alloy
Seals:Neoprene

2 Surface:Varnish grey
-Aluminium Oxide +Varnish Black

3 Varnish on the inside not necessary

4 Packaging
Quantity 5 Pieces in a box

5 OBSOLETE PARTS: OBSOLETE CIS STREAMLINING PER D.RENAUD/D.SINISI

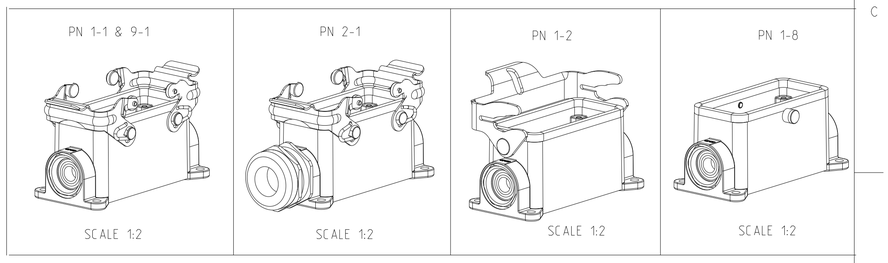

9-1	2-8	1-8	2-2	1-2	2-1	1-1	DESCRIPTION	MATERIAL	SURFACE	COLOR	ITEM NO	REMARKS
1							DS-Cable fitting Pg21	Brass	Nickel plated		14	Sealing with viton
	1			1		1	Hut-Gland Fitting Pg21	Brass	Nickel plated		13	
		1			1		DS-Cable fitting Pg21	Brass	Nickel plated		12	
	2						ZB-Clip Positioner	Stainless steel			11	
		2					ZB-Clip Positioner	Steel	Zinc plated		10	
			1				LB-Side Clip	Stainless steel			9	
				1			LB-Side Clip	Steel	Zinc plated		8	
					2		VS-Locking Clip	Stainless steel			7	
2						2	VS-Locking Clip	Steel	Zinc plated		6	
	1						Profile seal	Viton		Grey	5	
	1	1	1	1	1	1	Profile seal	Neoprene		Black	4	
1							Surface mounted housing side entry HB.16.Pg.1.21	Aluminium		Without varnish	3	
	1		1		1		Surface mounted housing side entry HB.16.Pg.1.21	Aluminium	Aluminium oxide	Black RAL 9005	2	
		1		1		1	Surface mounted housing side entry HB.16.Pg.1.21	Aluminium		Grey RAL 7001	1	

ORDERING TEXT

HB.16.SG-VS.1.21
~~HB-K.16.SG-VS.1.21~~
HB.16.SG-LB.1.21
~~HB-K.16.SG-LB.1.21~~
~~HB-Z.16.SG-ZVGR.1.21~~
~~HB-K/Z.16.SG-ZVGR.1.21~~
HB.16.SG-VS.1.21-SO

THIS DRAWING IS A CONTROLLED DOCUMENT.

DIMENSIONS: mm

TOLERANCES UNLESS OTHERWISE SPECIFIED:
A:ISO 2768-mK
B:DIN 16901-GS

0 PLC	±
1 PLC	±
2 PLC	±
3 PLC	±
4 PLC	±
ANGLES	±

MATERIAL: -

FINISH: - / -

DWN Schneider 21.07.1999
CHK Schweiger 21.07.1999
APVD -
PRODUCT SPEC 108-74001.74003
APPLICATION SPEC 114-74001.74004
WEIGHT -

TE Connectivity

NAME: Surface mounted housing side entry HB.16.1.21

SIZE	CAGE CODE	DRAWING NO	RESTRICTED TO
A1	00779	C-1102298	-

CUSTOMER DRAWING | SCALE 1:1 | SHEET 1 OF 1 | REV A6

4805 (3/13)