REVISIONS					
ZONE	LTR	ECN	DESCRIPTION	DATE	APPROVED
	A	28678	RELEASE FOR PRODUCTION Y.C.	4-16-84	
	B	29565	CHANGE GRID PATTERN & ADD CAV. ID. NOS. Y.C	7-12-85	
	C	3229	SUBSTITUTE ITEM NO'S TO DESCRIPS ADD SLEEVING. NOTE 2 WAS: "(ITEM 1 THRU 7) 300 VOLTS WAS: 1000 VOLTS.	7/19/89	
	D	37265	MARKING UPDATE, SEE ECN	8/25/97	
C-3	E	42680	IS: .134/.141 WAS: .121/.135	11/18/04	

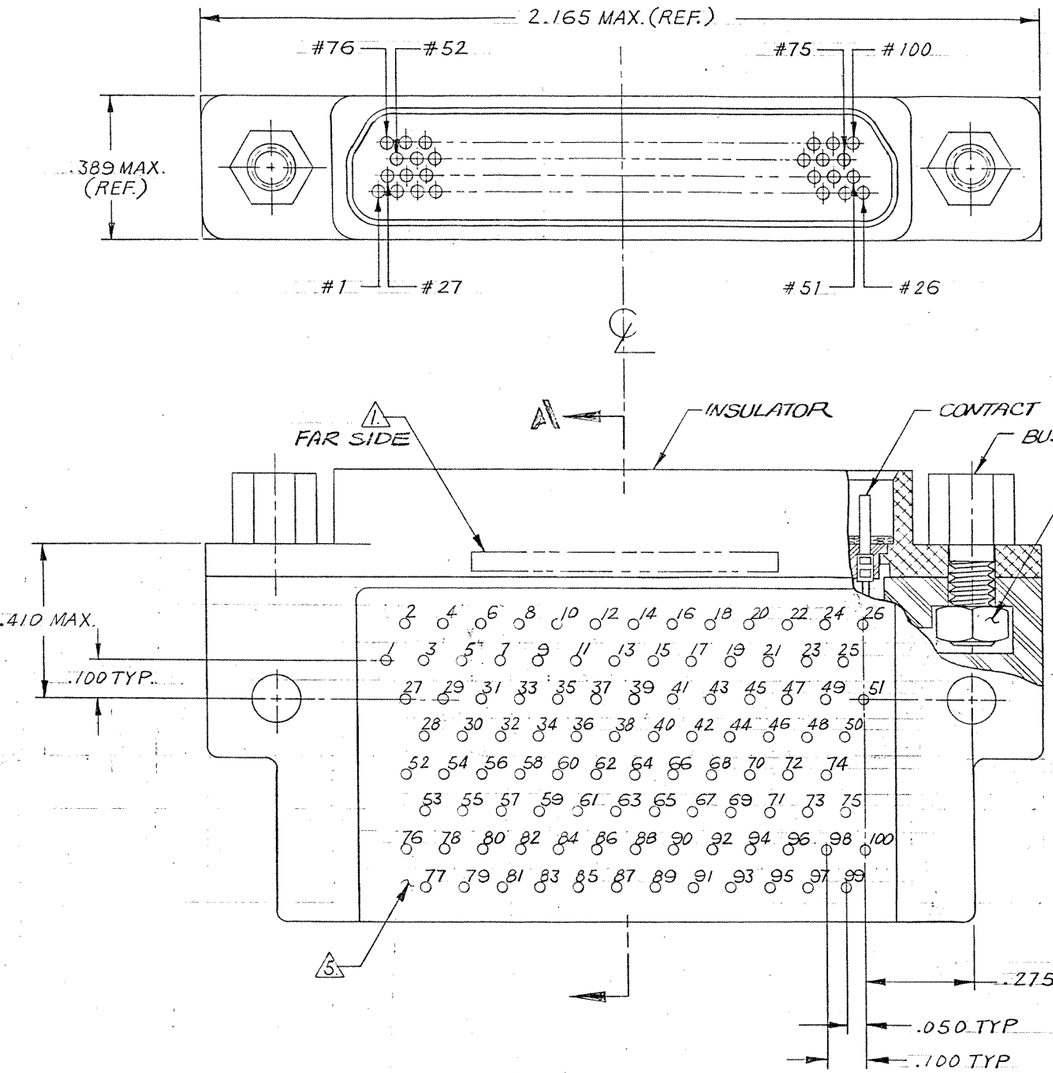

CAUTION

UNINSULATED WIRES USED IN THIS ASSEMBLY.
MUST PASS 300 VOLT "HI POT" BEFORE AND AFTER POTTING.

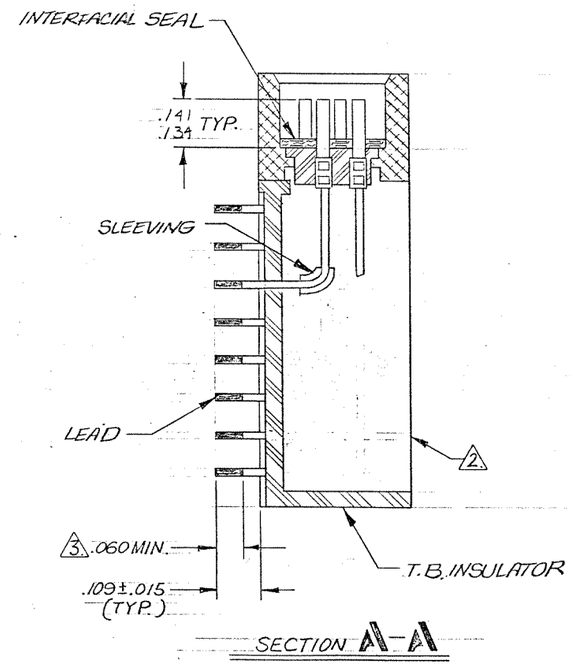

NOTES: UNLESS OTHERWISE SPECIFIED.

1. MARKING: MARK OPPOSITE SIDE PER MEP 203-12
2. ASSEMBLE ALL ITEMS (EXCEPT DUST COVER), THEN FILL WITH EPOXY AROUND HEX NUT & T.B. BLOCK BACKPOTTING AS SHOWN. USE HYSOL # 4215 & # 3561.
3. TERMINAL WIRES TO BE SOLDER COATED .003 MAX. (PER SIDE) IN LOCATION SHOWN. SOLDER TO BE QQ-S-571, TYPE Sn 63, FLUX PER MIL-F-14256, TYPE A.
4. CRIMP LEADS INTO CONTACTS PER MEP 302-05.
5. TERMINAL IDENT NOS. AS SHOWN (VIEWED FROM THE MOUNTING SURFACE) DO NOT ACTUALLY APPEAR ON THE PART (FOR IDENTIFICATION ONLY)

Tyco Dwg 1-1532142-0
Micro P/N 094-4906-7000

QTY REQD	CODE IDENT	PART OR IDENTIFYING NO.	NOMENCLATURE OR DESCRIPTION

PARTS LIST

NEXT ASSY	USED ON

UNLESS OTHERWISE SPECIFIED DIMENSIONS ARE IN INCHES
TOLERANCES ARE:
FRACTIONS ± DECIMALS .XX ± .XXX ± .005 ANGLES ±

MATERIAL

FINISH

CONTRACT NO.

APPROVALS		DATE
DRAWN	YNG CHU	2/27/84
CHECKED		4/11/84
PR. ENG.		4.18.84
APPD.		

These drawings and specifications are the property of Microdot Inc., are issued in strict confidence and shall not be divulged, be reproduced or copied, or used as the basis for the manufacture or sale of any article without written permission of Microdot Inc.

MALCO
A MICRODOT COMPANY, INC.
306 PASADENA AVE., SO. PASADENA, CALIF. 91030

METAL SHELL 90° LO-PROFILE CONNECTOR (MIL-C-83513/) MCK-**-P-100 SRTI (WITH JACKPOST)

PROD. CODE 845

CODE M

SIZE	CODE IDENT NO.	DRAWING NO.
D	98278	094-4906-7000