THIS DRAWING IS UNPUBLISHED. RELEASED FOR PUBLICATION -,- .
© COPYRIGHT - TE Connectivity Ltd. ALL RIGHTS RESERVED.

REVISIONS

P	LTR	DESCRIPTION	DATE	DWN	APVD
	C	REVISED PER ECR-17-018264	22JAN2018	BDA	SG

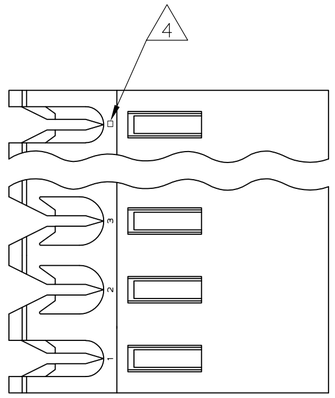

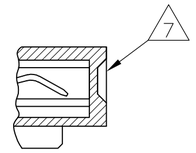

DETAIL A

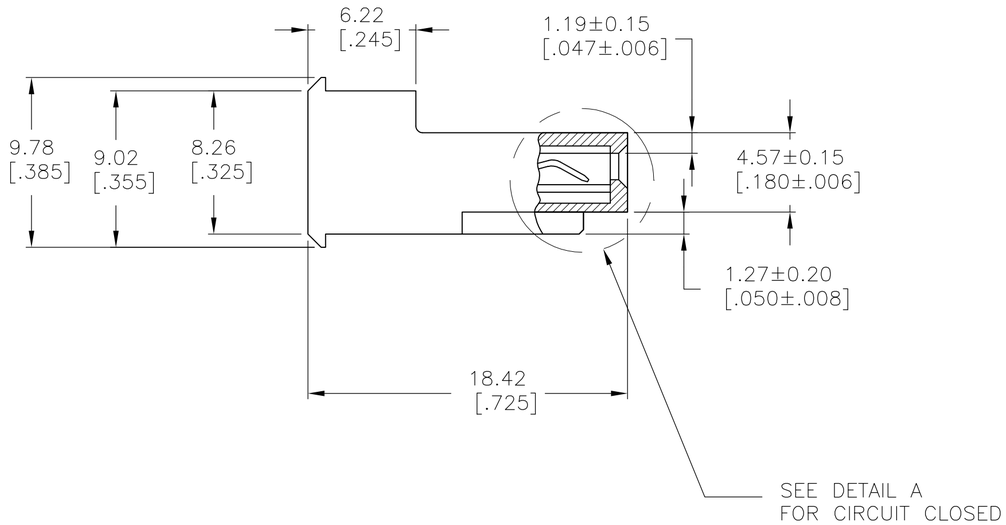

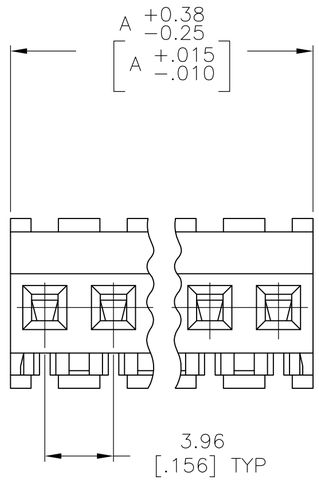

1. MATERIAL: CONNECTOR- NYLON UL94V-2 (RED).
   CONTACTS- 0.30[.012] THICK COPPER ALLOY BRIGHT TIN-LEAD
   0.00203[.000080] MIN THICK FOR -2 THRU -28
   -0.30[.012] THICK COPPER ALLOY MATTE WHISKER
   MITIGATED TIN 0.00203[.000080] MIN THICKNESS
   OVER NICKEL UNDERPLATE FOR -32 THRU -58.
2. CONTACTS ACCEPT 22 AWG WIRE WITH 2.41[.095] MAX INSULATION DIAMETER.
3. CONTACTS MUST ACCEPT 1.14±0.03[.045±.001] SQUARE POST AND REMAIN LOCKED IN POSITION.
4. IDENTIFICATION NUMBER FOR LAST CIRCUIT MAY NOT APPEAR ON ALL ASSEMBLIES.
5. DIMENSIONS IN BRACKETS ARE IN INCHES.
6. HOUSING FEATURES ARE: FEED-THRU WITHOUT LOCKING RAMP.
7. DETAIL "A" SHOWS A CIRCUIT MOLDED CLOSED.
8. OBSOLETE PARTS.

	FINISH	DIM A	NO OF CIRCUITS	PART NO
	TIN	19.81 [.780]	5	3-647174-5
8 SUPERSEDED	TIN-LEAD	19.81 [.780]	5	~~647174-5~~

THIS DRAWING IS A CONTROLLED DOCUMENT.

DIMENSIONS: mm [INCHES]

TOLERANCES UNLESS OTHERWISE SPECIFIED:
0 PLC ± -
1 PLC ± -
2 PLC ± -
3 PLC ± 0.13[.005]
4 PLC ± -
ANGLES ± -

MATERIAL 1
FINISH 1

DWN B.LEWIS 06JAN98
CHK R.SWING 06JAN98
APVD C.JONES 06JAN98
PRODUCT SPEC 108-1051
APPLICATION SPEC 114-1020
WEIGHT -

TE Connectivity Ltd.

NAME MTA-156 CONNECTOR ASSEMBLY, 22 AWG, NO. 4 CIRCUIT CLOSED SPECIAL

SIZE A2 | CAGE CODE 00779 | DRAWING NO C-647174 | RESTRICTED TO -

CUSTOMER DRAWING | SCALE 4:1 | SHEET 1 OF 1 | REV C

647174