025 Receptacle Contact

The performance of applicable product is guaranteed only when processed by proper application tooling and condition described in this specification and/or TE recognized ones. No product is guaranteed when processed with the other tool or condition.

1. Scope

This specification covers the requirements for crimping of .025 Receptacle Contact.

2. Applicable Contacts

TE Part Numbers		Finish	Applicable Wires
Strip Form	Loose Piece		
1123343-1	1318143-1	Pre-Tin	AVSS/AVSSH/AESSX 0.3-0.5 CAVUS/ CAVS 0.22-0.5 TWP 0.35-0.5
1123343-2	1318143-2	Selective Gold	

3. Nomenclature

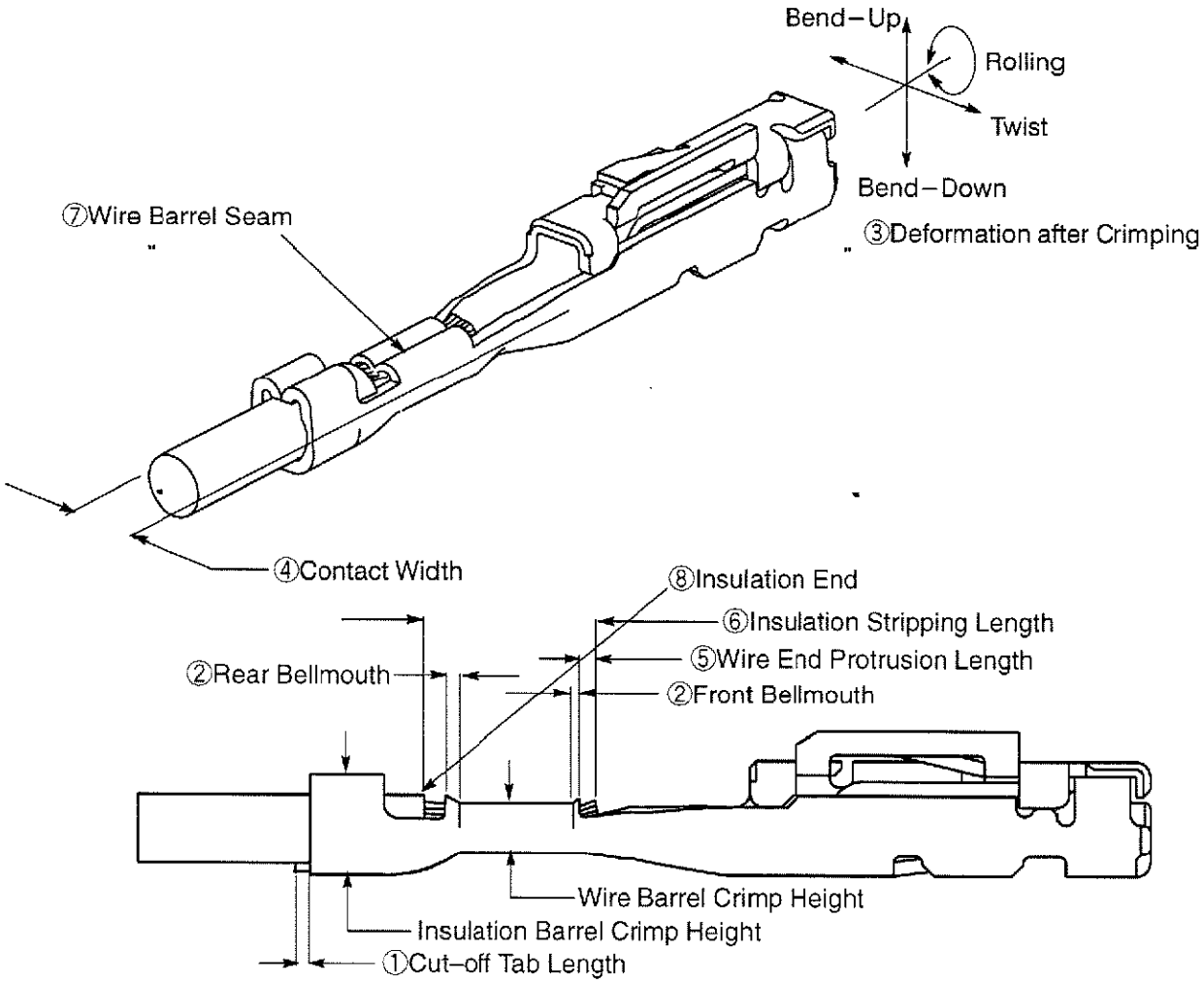

Fig.1

© Copyright 2009 Tyco Electronics Japan G.K. All international rights reserved.
*：商標 Trademark

4. Crimping Condition

4.1 Applicator Crimp

Check Items			AVSS/AVSSH/AESSX 0.3 CAVUS 0.22-0.5 CAVS 0.22-0.3 TWP 0.35	AVSS/CAVS/AVSSH/ AESSX 0.5 TWP 0.5	Remarks
1	Cut-off Tab Length		0.1-0.5mm		Fig.1-①
2	Bellmouth	Front	0.2mm Max.		Fig.1-②
		Rear	0.1-0.4mm		
3	Deformation after Crimping	Bend	-1° , + 2°Max.		Fig.1-③
		Twist	±4°Max.		
		Rolling	±10°Max.		
4	Contact Width after Crimping		1.6mm Max.	1.8mm Max.	Fig.1-④
5	Wire End Protrusion Length		0-1mm		Fig.1-⑤
6	Insulation Stripping Length		3.0-3.5mm (Before Crimping)		Fig.1-⑥
7	Wire Barrel Seam		Seam must be closed (No strand looses out of the seam)		Fig.1-⑦
8	Insulation End		Insulation End must be between Wire Barrel and Insulation Barrel		Fig.1-⑧

4.2 Hand Tool Crimp

Check Item			AVSS/CAVS 0.3 AVSSH/AESSX 0.3 CAVUS 0.3-0.5	AVSS/CAVS/ AVSSH/AESSX 0.5	Remarks
1	Cut-off Tab Length		0.1-0.5mm		Fig.1-①
2	Bellmouth	Front	0.2mm Max.		Fig.1-②
		Rear	0.1-0.4mm		
3	Deformation after Crimping	Bend	±4°Max.		Fig.1-③
		Twist	±4°Max.		
		Rolling	±10°Max.		
4	Contact Width after Crimping(1)		1.6mm Max.	1.8mm Max.	Fig.1-④
5	Wire End Protrusion Length		0-1mm		Fig.1-⑤
6	Insulation Stripping Length		3.0-3.5mm (Before Crimping)		Fig.1-⑥
7	Wire Barrel Seam		Seam must be closed (No strand looses out of the seam)		Fig.1-⑦
8	Insulation End		Insulation End must be between Wire Barrel and Insulation Barrel		Fig.1-⑧

NOTE (1); Dimensions after crimping vary by skill of operators.
Make sure that flashes on the bottom of wire barrel are 0.25 mm max, and the contacts can be inserted into housing smoothly.

5. Crimp Data

5.1 Applicator Crimp

Contact Part Number (Strip Form)	Wire Size (Nominal)	Applicator Part Number	Wire Barrel Crimp			Insulation Barrel Crimp			Crimp Tensile Strength (N)
			Width(2) (mm)	Height(1) (mm)	Disk Ltr.	Width(2) (mm)	Height (mm)	Disk Ltr.	
1123343-1 1123343-2	0.22	937767-2	1.4 " F"	0.84	C	1.4 " F"	See Para. 6		39 Min. (3)
	0.3 0.3f			0.96	B				70 Min. (3)
	0.5 0.5f			1.06	A				90 Min.
	TWP 0.35			0.76	C				70 Min. (3)
	TWP 0.5			0.91	B				90 Min.

NOTE
(1); Wire Barrel Crimp Height to be within ±0.05mm.
(2); Crimp Width dimensions are not the product width after crimping, but given by the width of crimper slot for reference.
(3); Crimp Tensile Strength of 0.22-0.35 wire includes the wire grip of insulation barrel

5.2 Hand Tool Crimp

Contact Part Number (Loose Piece)	Wire Size (Nominal)	Hand Tool Part Number	Insulation Diameter (mm)	Crimp Symbol		Wire Barrel (1) Crimp Height (mm)	Crimp Tensile Strength (N)
				Wire	Insulation		
1318143-1 1318143-2	0.3 0.3f	1276652-1 1463260-1(3)	1.1-1.7	20-22	INS	0.84-1.00	50 Min. (2)
	0.5 0.5f						63 Min.

NOTE
(1); This tool is for maintenance. The different dimension may be caused according to the ability of operator. Except for the purpose above, you should use the applicator.
(2); Crimp Tensile Strength of 0.3 wire includes the wire grip of insulation barrel crimp.
(3); Common hand tool for receptacle and tab.

6. Insulation Barrel Crimp Data

Contact Part Number (Strip Form)	Wire Size (Nominal)	AVSSH/AVSS		CAVUS		CAVS		AESSX		TWP	
		Height (mm)	Disk Ltr. (Ref.)	Height (mm)	Disk Ltr. (Ref.)	Height (mm)	Disk Ltr. (Ref.)	Height (mm)	Disk Ltr. (Ref.)	Height (mm)	Disk Ltr. (Ref.)
1123343-1 1123343-2	0.22	-	-	1.63(1)	4	-		1.75(1)	3	-	-
	0.3 0.3f	1.85(1)	4	1.75(1)	5	1.85(1)	4	1.85(1)	4	-	-
	0.35	-	-	-	-	-	-	-	-	1.87(1)	4
	0.5 0.5f	1.85(2)	4	1.85(2)	4	1.85(2)	4	1.85(2)	4	2.00(2)	3

NOTE
(1); Insulation Barrel Crimp Height to be within ±0.1mm.
(2); Insulation Barrel Crimp Height to be within +0.13/-0.10 mm.

7. Applicable Wire Data

Wire Size (Nominal)	Number /Diameter (mm) of Conductor	Calculated Cross sectional Area (mm^2)	Insulation Diameter (mm)									
			AVSSH /AVSS		CAVUS		CAVS		AESSX		TWP	
			STD.	Max.	STD.	Max.	STD.	Max.	STD.	Max.	STD.	Max.
0.22	7/Compressed	0.2199	-	-	0.95	1.05	1.25	1.35	-	-	-	-
0.3	7/0.26	0.3716	1.4	1.5	1.1	1.2	1.4	1.5	-	-	-	-
0.3f	19/0.16	0.3821	1.4	1.5	-	-	1.4	1.5	1.4	1.5	-	-
0.35	7/0.26	0.3716	-	-	-	-	-	-	-	-	1.55	1.63
0.5	7/0.32	0.5629	1.6	1.7	1.3	1.4	1.6	1.7	-	-	-	-
	7/0.31	0.5283	-	-	-	-	-	-	-	-	1.72	1.80
0.5f	19/0.19	0.5387	-	-	-	-	-	-	1.6	1.7	-	-