CM-SCE Military grade tie-on cable marker tags

CM-SCE markers are flat, rigid, non-adhesive labels that can be used to identify large cables and wire bundles in environments such as military and aerospace. Marker tags are applied to cables or wire bundles with cable ties.

Print performance meets or exceeds the requirements of SAE AS81531 4.6.2 and MIL-STD-202.

Features and benefits

- Side entry provides access to big size and wire bundles as well as retrofit and repair capability
- Highly flame-retardant
- Highly resistant to abrasion, mechanical abuses, fluids, lubricants and solvents
- Ease of use: markers can be easily removed from the carrier
- Easy installation: only standard cable tie-wraps are needed to install markers. No extra steps required
- Excellent print permanence when printing on the rough side of the marker

Temperature rating

Operating temperature range	−55°C to +135°C	−67°F to +275°F

Specifications/approvals

Tyco Electronics	RW 2513 TTDS-021
Military	Mark permanence: SAE AS81531 4.6.2 Solvent resistance: MIL-STD-202 Method 215J
Industry	UL MH26328 Group PG1S2

Printer information

Tyco Electronics printer	AM6310 (dot matrix) T312M (thermal transfer)
Tyco Electronics ribbon	1892BK04-RIBBON (dot matrix) (dot matrix) 1966-RIBBON (thermal transfer)

Part numbering system

CM-SCE - 2.5K - 1/4 - 4H - 9

- Color
- Tie-wrap holes
- Markable height of marker (inches)
- Pack size
- Product family

OBSOLETE
NOT the LATEST REVISION

Catalog 1654227
Revised 04-07

www.tycoelectronics.com

Dimensions not italicized are in millimeters while dimensions in inches are italicized.

Dimensions are shown for reference purposes only. Specifications subject to change.

USA: 1-800-522-6752
Canada: 1-905-470-4425
Mexico: 01-800-733-8926
C. America: 52-55-5-729-0425
South America: 55-11-3611-1514
Hong Kong: 852-2735-1628
Japan: 81-44-844-8013
UK: 44-141-810-8967

CM-SCE Military grade tie-on cable marker tags

Ordering information

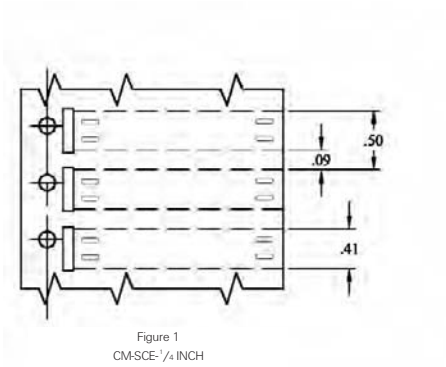

Figure 1
CM-SCE-1/4 INCH

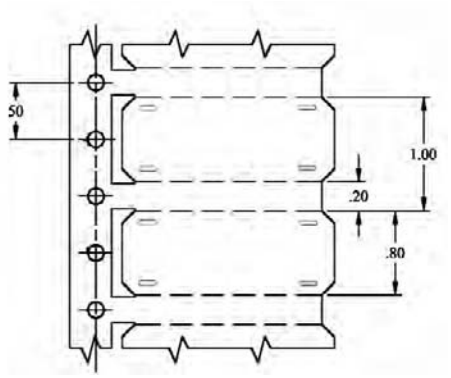

Available sizes and formats

Ordering description	Size	Markable height		Markable length		Recommended use range	
		mm	*inches*	mm	*inches*	mm	*inches*
CM-SCE-1/4-6H- <color>	1/4	6.40	*0.250*	50.80	*2.000*	5.08 – 12.50	*0.200 – 0.492*
CM-SCE-1/4-4H- <color>	1/4	6.40	*0.250*	50.80	*2.000*	5.08 – 12.50	*0.200 – 0.492*
CM-SCE-TP-1/4-4H- <color>*	1/4	6.40	*0.250*	50.80	*2.000*	5.08 – 12.50	*0.200 –0.492*
CM-SCE-1/2-4H- <color>	1/2	12.70	*0.500*	50.80	*2.000*	12.50 and up	*0.492 and up*
CM-SCE-TP-1/2-4H- <color>*	1/2	12.70	*0.500*	50.80	*2.000*	12.50 and up	*0.492 and up*
CM-SCE-1/2-6H- <color>	1/2	12.70	*0.500*	50.80	*2.000*	12.50 and up	*0.492 and up*
CM-SCE-TP-1/2-6H- <color>*	1/2	12.70	*0.500*	50.80	*2.000*	12.50 and up	*0.492 and up*

* for thermal transfer printing

Options

Tie-wrap holes	1/4-inch tags	Four holes standard	
	1/2-inch tags	Four holes	Six holes
	Code	4H	6H
Fanfold	Code	Fx (substitute package size code for "x")	
Package sizes	Standard	250 pieces	
Colors	Standard	White	
	Code	9	
	Nonstandard	Yellow	
	Code	4	

Ordering information: Specify product name, markable height of marker, pack size, number of tie wraps and color.

Ordering example: CM-SCE–2.5K-1/4-4H-9

Dimensions not italicized are in millimeters while dimensions in inches are italicized.

Dimensions are shown for reference purposes only. Specifications subject to change.

USA: 1-800-522-6752
Canada: 1-905-470-4425
Mexico: 01-800-733-8926
C. America: 52-55-5-729-0425

South America: 55-11-3611-1514
Hong Kong: 852-2735-1628
Japan: 81-44-844-8013
UK: 44-141-810-8967