THIS DRAWING IS UNPUBLISHED. RELEASED FOR PUBLICATION 2005
© COPYRIGHT 2005 BY TYCO ELECTRONICS CORPORATION. ALL RIGHTS RESERVED.

LOC	DIST
A1	-

REVISIONS

P	LTR	DESCRIPTION	DATE	DWN	APVD
	A1	New Drawing	25AUG2005	Kr	An
	A2	ECR-06-017801	24JUL12006	Kr	An
	C1	ECR-09-018278	20OCT2009	Ma	An

Signal	Aderfarbe
S1	rot
S2	gelb
S3	schwarz
S4	blau
R1	rot-weiss
R2	gelb-weiss

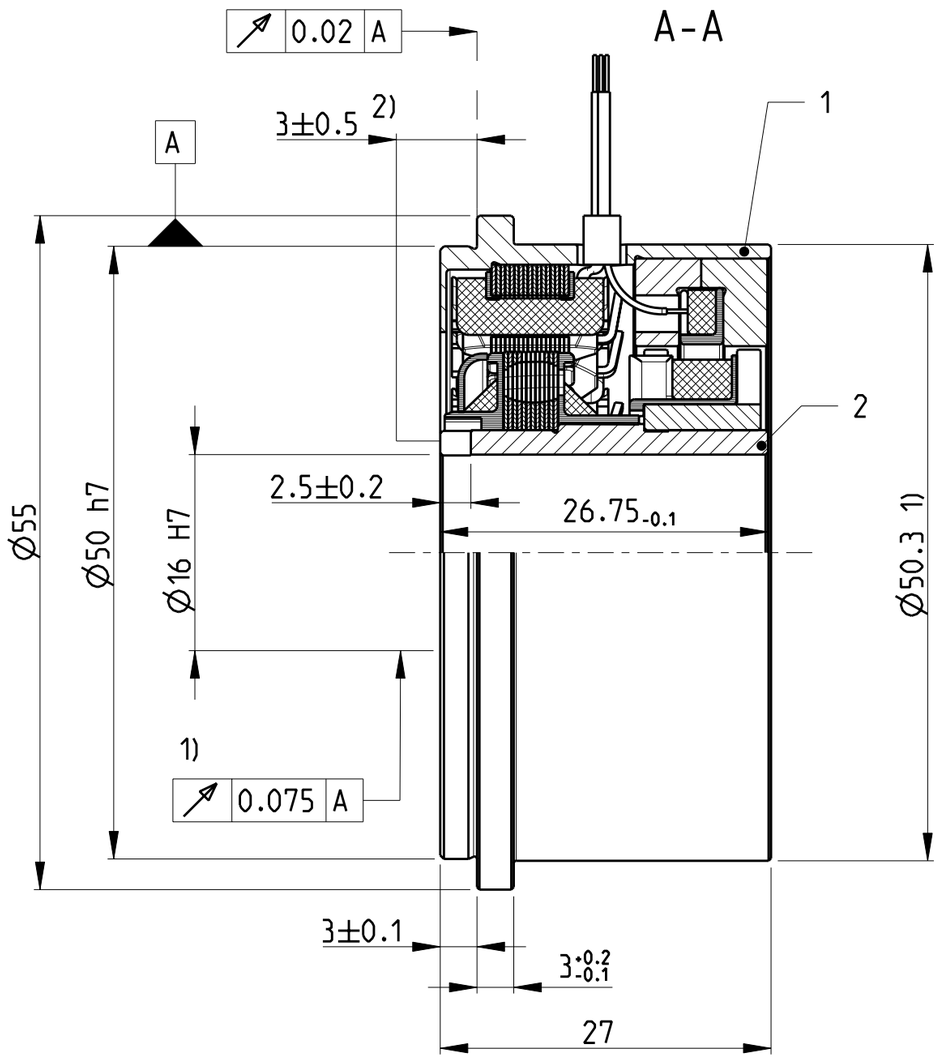

1:1

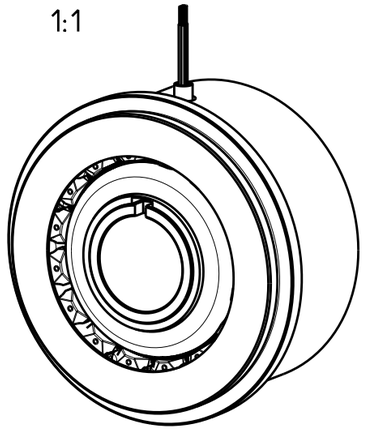

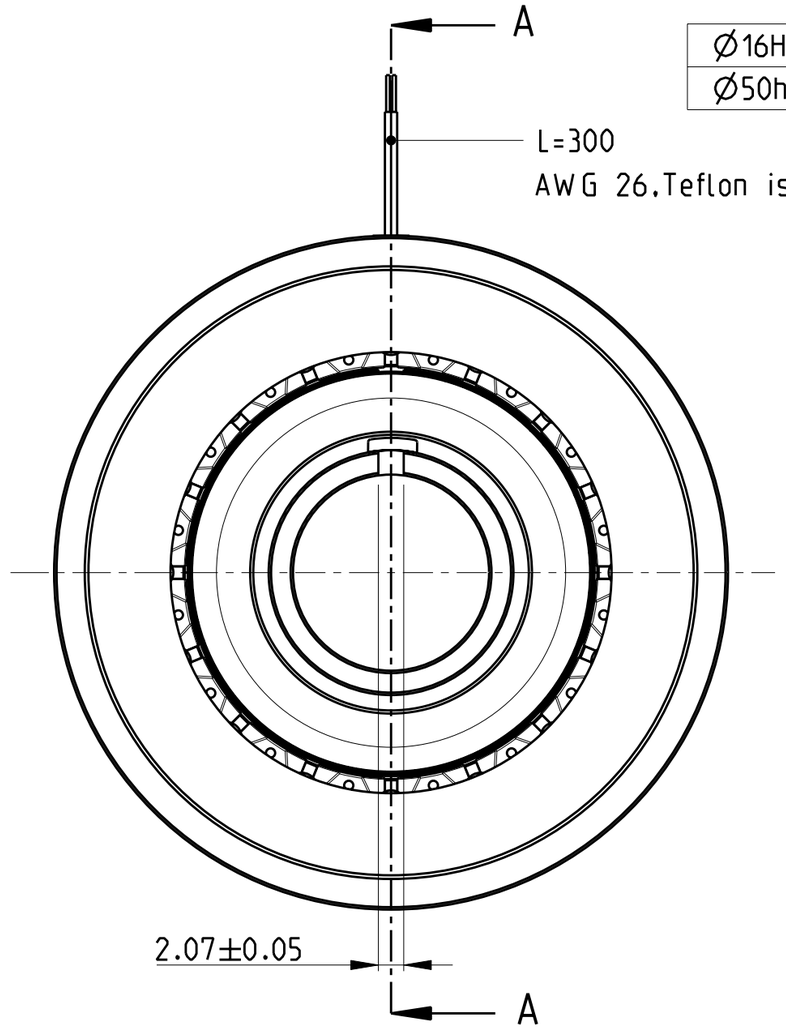

Ø16H7	+0.018 0
Ø50h7	0 -0.025

Ersetzt / replace	V23401-T2014-B209

1) Gesamtschlag im eingebauten Zustand
2) Axialversatz

1	1-1824360-0	Rotor kpl. / Bauform B2 (21N)	2
1	1-1824206-0	Gehäuse kpl. / Bauform T2	1
1-1824407-0	PARTNUMBER	DESCRIPTION	ITEM NO
-	REVISION OF EACH ASSY NO. (WHEN BLANK, USE DWG. REVISION)		
	PARTS LIST		

THIS DRAWING IS A CONTROLLED DOCUMENT FOR TYCO ELECTRONICS CORPORATION IT IS SUBJECT TO CHANGE AND THE CONTROLLING ENGINEERING ORGANIZATION SHOULD BE CONTACTED FOR THE LATEST REVISION.

DIMENSIONS: mm

TOLERANCES UNLESS OTHERWISE SPECIFIED:
0 PLC ±-
1 PLC ±-
2 PLC ±-
3 PLC ±-
4 PLC ±-
ANGLES ±-

MATERIAL -
FINISH -

DWN Kraus 03MAY2005
CHK -
APVD Andrae 24JUL12006
PRODUCT SPEC -
APPLICATION SPEC -
WEIGHT -

tyco Electronics
tyco Electronics AMP GmbH
D - 67346 Speyer

NAME
Massbild Hohlwellendrehmelder
Dimensional Drawing Resolver
V23401-T2014-B209

SIZE	CAGE CODE	DRAWING NO	RESTRICTED TO
A3	00779	C-4-1393048-6	-

CUSTOMER DRAWING
SCALE 2:1 SHEET 1 OF 1 REV C1

AMP 1470-19 REV 31MAR2000

Pro/ENGINEER DRAWING