THIS DRAWING IS UNPUBLISHED. RELEASED FOR PUBLICATION 20
© COPYRIGHT 20 BY - TE CONNECTIVITY ALL RIGHTS RESERVED.

REVISIONS

P	LTR	DESCRIPTION	DATE	DWN	APVD
	1	INITIAL PROPOSED	06SEP2015	ML	SZ
	2	ADD THE CONCENTRICITY TOLERANCE 0.10 MAX	30SEP2015	ML	SZ

NOTES:

1. MATERIAL: ZINC ALLOY ZAMAK 3, DIE CASTING.
2. FINISH: CHROMATE CONVERSION COATING. (ROHS COMPATIBLE)

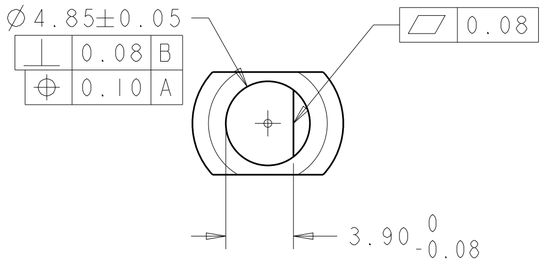

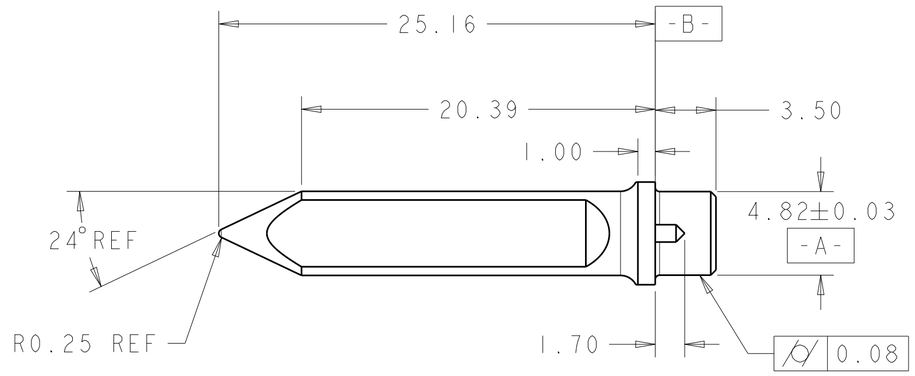

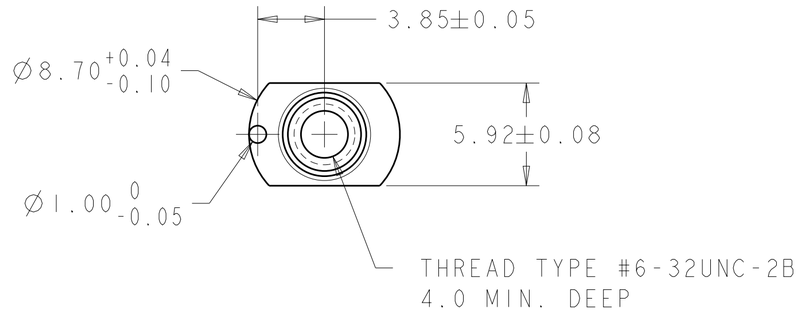

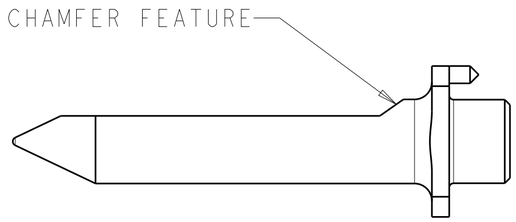

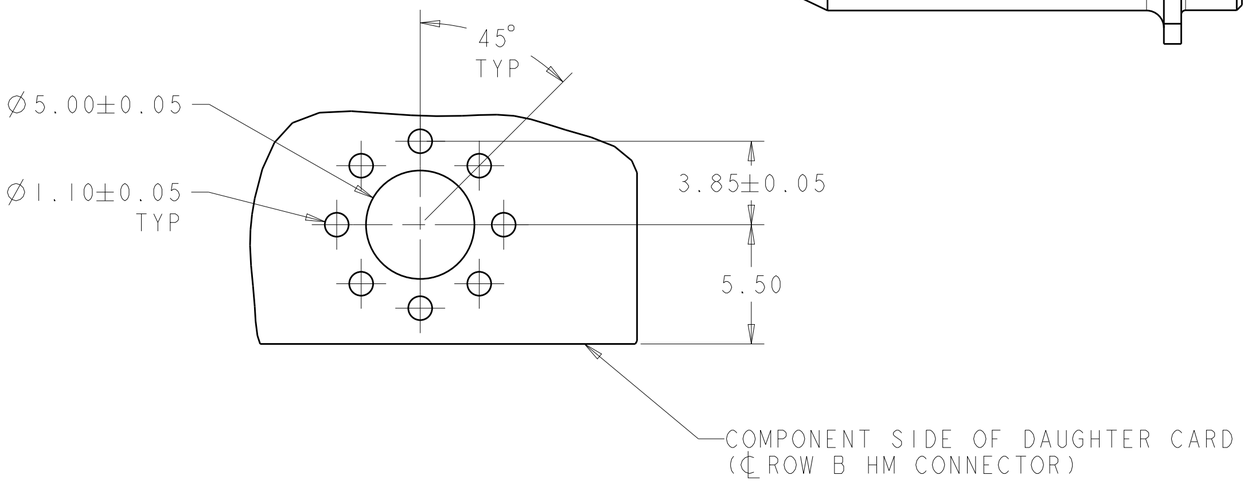

RECOMMENDED P.C. BOARD LAYOUT

PROPOSED DESIGN

PRODUCT NUMBER WILL BE ASSIGNED WHEN RELEASED

DESIGN IS SUBJECT TO CHANGE WITHOUT NOTICE

DESCRIPTION	PART NUMBER
KEYED GUIDE PIN	3-5223985-1

THIS DRAWING IS A CONTROLLED DOCUMENT.

DIMENSIONS: mm

TOLERANCES UNLESS OTHERWISE SPECIFIED:
0 PLC ±-
1 PLC ±-
2 PLC ±0.13
3 PLC ±-
4 PLC ±-
ANGLES ±0° 30′

MATERIAL - 1

FINISH - 2

DWN MAC LIU 06SEP2015
CHK SUNY ZHAO 06SEP2015
APVD SUNY ZHAO 06SEP2015
PRODUCT SPEC -
APPLICATION SPEC -
WEIGHT -

TE Connectivity

NAME KEYED GUIDE PIN UNIVERSAL POWER MODULE -

SIZE	CAGE CODE	DRAWING NO	RESTRICTED TO
A2	-	C-3-5223985-1	-

Customer Drawing | SCALE 4:1 | SHEET 1 OF 1 | REV 2

1471-9 (3/13)