© 2011 TE Connectivity. All Rights Reserved.

REVISIONS					
P	LTR	DESCRIPTION	DATE	DWN	APVD
	F1	REVISED PER ECN-25-300404	28MAR2025	TR	SKN

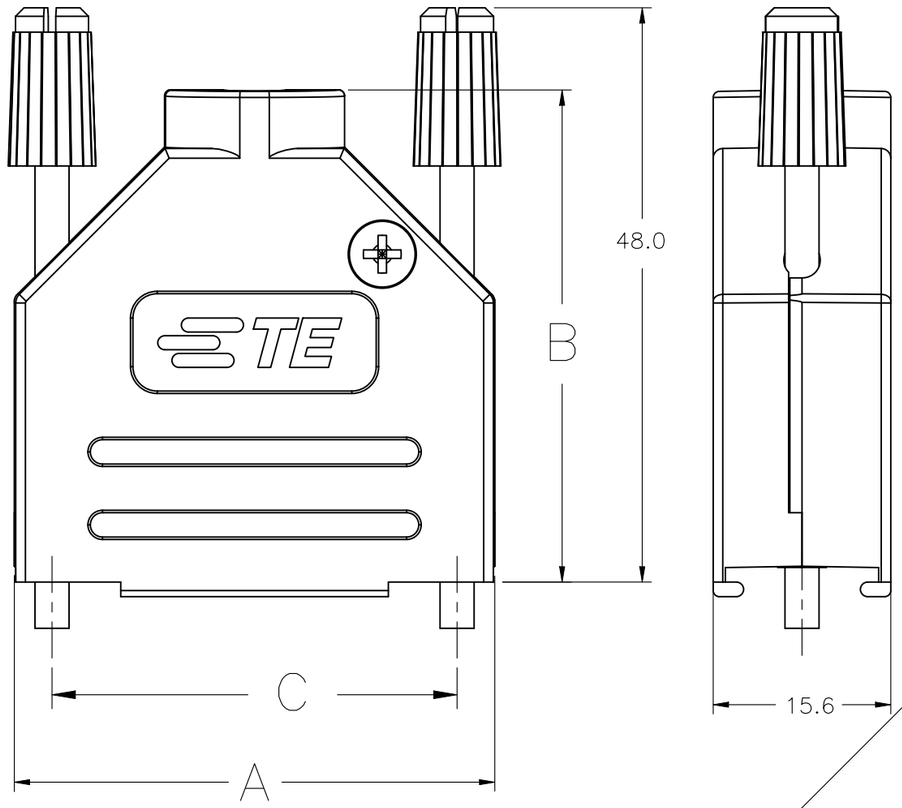

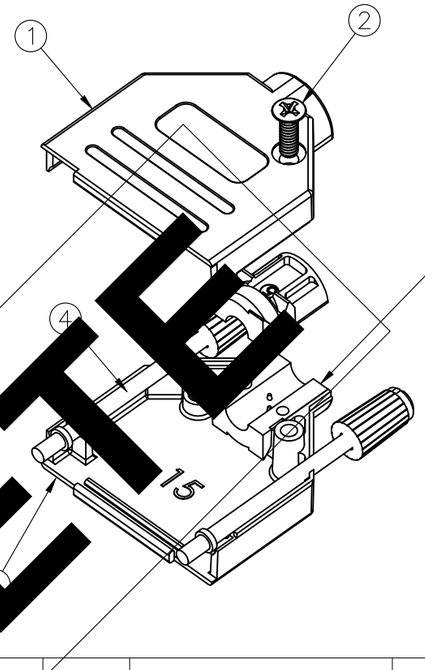

OBSOLETE

1. FOR ASSEMBLY DETAILS, REFER TO LEAFLET 2227518-1.

2. BULK PACKAGED BACKSHELL ASSEMBLIES: ITEMS 1 THRU 4, 100 TIMES QTY SHOWN IN TABLE IN 1 BAG FOR EACH ITEM. ALL BAGS IN 1 BOX WITH (1) 2227518-1 LEAFLET.

3. INDIVIDUALLY PACKAGED SHELL ASSEMBLIES: 1 BAG CONTAINS ALL COMPONENTS FOR 1 COMPLETE ASSEMBLY. 100 BAGS PER BOX, (1) 2227518-1 LEAFLET PER BOX.

4. TERMINATES 4.0-13.0 CABLE DIAMETERS.

5. 15 POSITION SHOWN.

6. TRIVALENT CHROMIUM CHROMATE COATING OVER ZINC PLATING.

7. OPTIONAL CABLE TRIM KIT AVAILABLE FOR 6.[illegible]5 DIAMETER CABLE. SE[illegible]7876[illegible]

8. OBSOL[illegible]

8	4	[illegible]	52.2	69.5	PHILLIPS	4-40 UNC	4	37 WAY	5-2198617-4
8	3	47.0	47.8	53.0	PHILLIPS	4-40 UNC	3	25 WAY	5-2198617-3
8	3	33.3	40.5	39.3	PHILLIPS	4-40 UNC	2	15 WAY	5-2198617-2
8	3	25.0	38.3	31.0	PHILLIPS	4-40 UNC	1	9 WAY	5-2198617-1
8	2	63.5	52.2	69.5	PHILLIPS	4-40 UNC	4	37 WAY	3-2198617-7
8	2	47.0	47.8	53.0	PHILLIPS	4-40 UNC	3	25 WAY	2-2198617-5
8	2	33.3	40.5	39.3	PHILLIPS	4-40 UNC	2	15 WAY	1-2198617-5
8	2	25.0	38.3	31.0	PHILLIPS	4-40 UNC	1	9 WAY	2198617-9
PACKAGING		C	B	A	SELF TAPPING FIXING SCREW TYPE	JACKSCREW THREAD	SHELL SIZE	POSITION	PART NUMBER

ITEM	DESCRIPTION	MATERIAL	FINISH	QTY
4	JACKSCREW ASSEMBLY, 4-40	POLYAMIDE, UL94 V2 KNOB	BLACK	2
		CARBON STEEL SHAFT	6	
3	STRAIN RELIEF SET	POLYCARBONATE UL94 V0	BLACK	1
2	SELF TAPPING FIXING SCREW	CARBON STEEL	6	2
1	BACKSHELL HALF	ABS UL94 V0	NICKEL	2

THIS DRAWING IS A CONTROLLED DOCUMENT.
DIMENSIONING AND TOLERANCING PER ASME Y14.5M-2009

DIMENSIONS: mm

TOLERANCES UNLESS OTHERWISE SPECIFIED:
0 PLC ± 0.5
1 PLC ± 0.5
2 PLC ± 0.5
3 PLC ± 0.5
4 PLC ± 0.5
ANGLES ± 0.5°

MATERIAL: SEE TABLE
FINISH: SEE TABLE

DWN C. VALENTINE 08DEC2011
CHK C. ROHDE 08DEC2011
APVD C. ROHDE 08DEC2011
PRODUCT SPEC —
APPLICATION SPEC —
WEIGHT 0.000000

TE Connectivity

NAME: SHIELDED PLASTIC BACKSHELL STRAIGHT ENTRY —

SIZE A3 | CAGE CODE 00779 | DRAWING NO C-2198617 | RESTRICTED TO —

CUSTOMER DRAWING | SCALE NTS | SHEET 1 OF 1 | REV F1

1470-19 (1/15)