THIS DRAWING IS UNPUBLISHED. RELEASED FOR PUBLICATION 20
© COPYRIGHT 20 BY - ALL RIGHTS RESERVED.

REVISIONS

P	LTR	DESCRIPTION	DATE	DWN	APVD
	B	REV PER ECO-10-013207	23JUN2010	RG	DO
	C	REV PER ECO-11-004536	04MAR2011	RG	DO
	D	REV PER ECO-15-018490	28DEC2015	RS	SZ

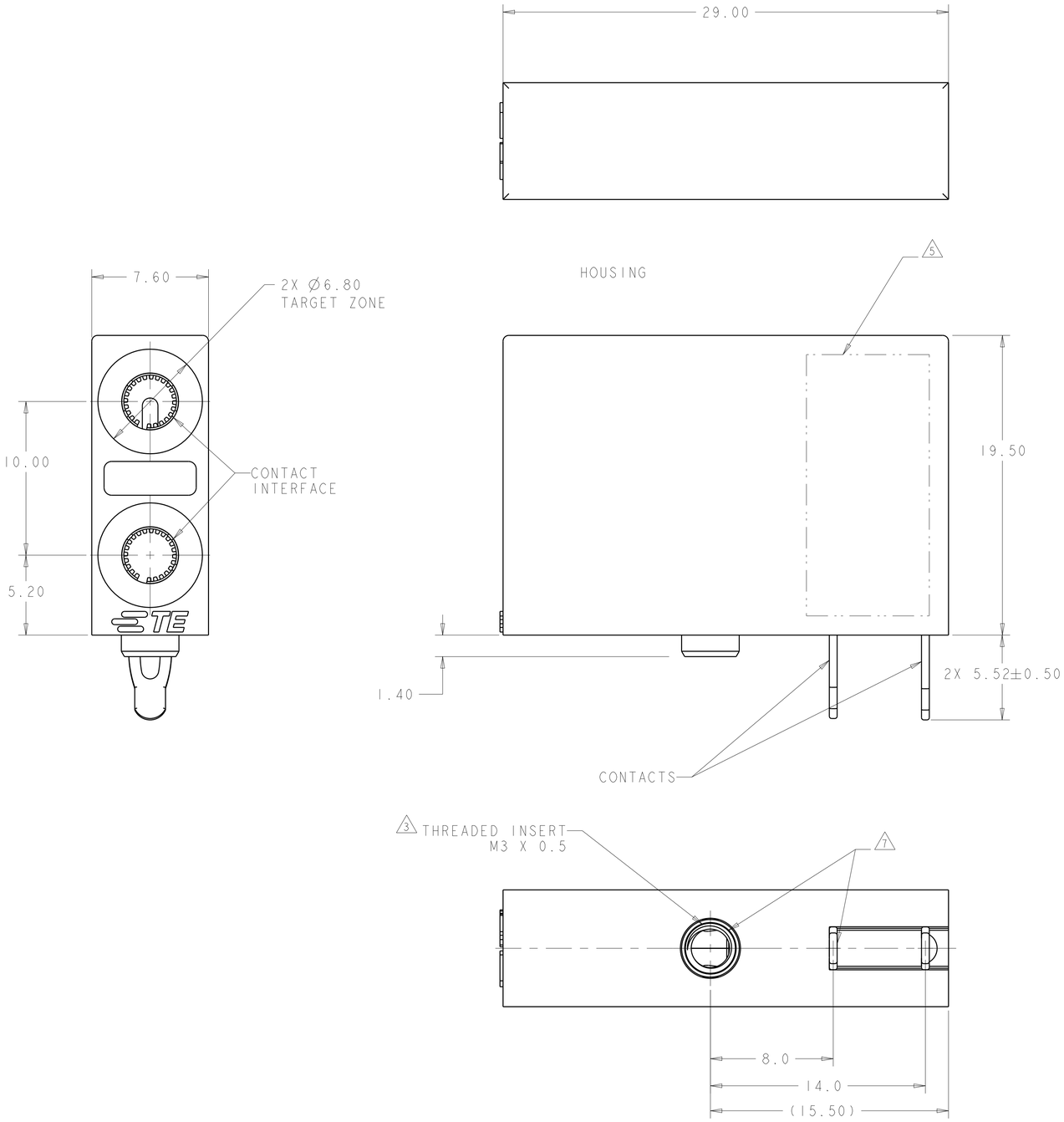

1 MATERIALS:
HOUSING: POLYESTER PBT THERMOPLASTIC, UL 94 V-O
CONTACT: COPPER ALLOY
CONTACT INTERFACE: COPPER ALLOY
INSERT: COPPER ALLOY

2 FINISH:
HOUSING: BLACK
CONTACT: SILVER PLATE, 5.08µm MIN THICK, OVER NICKEL UNDERPLATE
CONTACT INTERFACE: GOLD PLATE, 0.76µm MIN THICK, OVER NICKEL UNDERPLATE
INSERT: NICKEL PLATE

3

RECOMMENDED M3 SCREW LENGTH	
PCB THICKNESS	SCREW LGTH.
1.57mm [0.062"]	3.00mm
2.36mm [0.093"]	4.00mm
3.18mm [0.125"]	5.00mm

4. THIS PRODUCT HAS NOT BEEN VALIDATION TESTED.

5 PART NUMBER AND DATE CODE LABEL TO BE LOCATED APPROXIMATELY AS SHOWN.

6 MANUFACTURING TOLERANCE:
FINISHED HOLE: Ø2.59±0.05
DRILLED HOLE Ø2.687±0.020
COPPER PLATING: 0.050 - 0.025
TIN-LEAD PLATING: 0.015 - 0.004

7 THREADED INSERT & LOWER CONTACT MAY BE ELECTRICALLY COMMON.

2085181-1
PRODUCT NUMBER

THIS DRAWING IS A CONTROLLED DOCUMENT.

DIMENSIONS: mm

TOLERANCES UNLESS OTHERWISE SPECIFIED:
0 PLC ±-
1 PLC ±0.5
2 PLC ±0.35
3 PLC ±-
4 PLC ±-
ANGLES ±1°

MATERIAL 1
FINISH 2

DWN G.PETERS 10MAR2009
CHK D.DEFIBAUGH 10MAR2009
APVD D.DEFIBAUGH 10MAR2009
PRODUCT SPEC -
APPLICATION SPEC -
WEIGHT -

TE Connectivity

NAME 2 POSITION, RIGHT ANGLE, 3.17mm DIAMETER, SOCKET ASSEMBLY

SIZE	CAGE CODE	DRAWING NO	RESTRICTED TO
A1	00779	C-2085181	-

CUSTOMER DRAWING
SCALE 1:1 SHEET 1 OF 2 REV D

4805 (3/13)

THIS DRAWING IS UNPUBLISHED. RELEASED FOR PUBLICATION 20
© COPYRIGHT 20 BY - ALL RIGHTS RESERVED.

REVISIONS

P	LTR	DESCRIPTION	DATE	DWN	APVD
	-	SEE SHEET 1	-	-	-

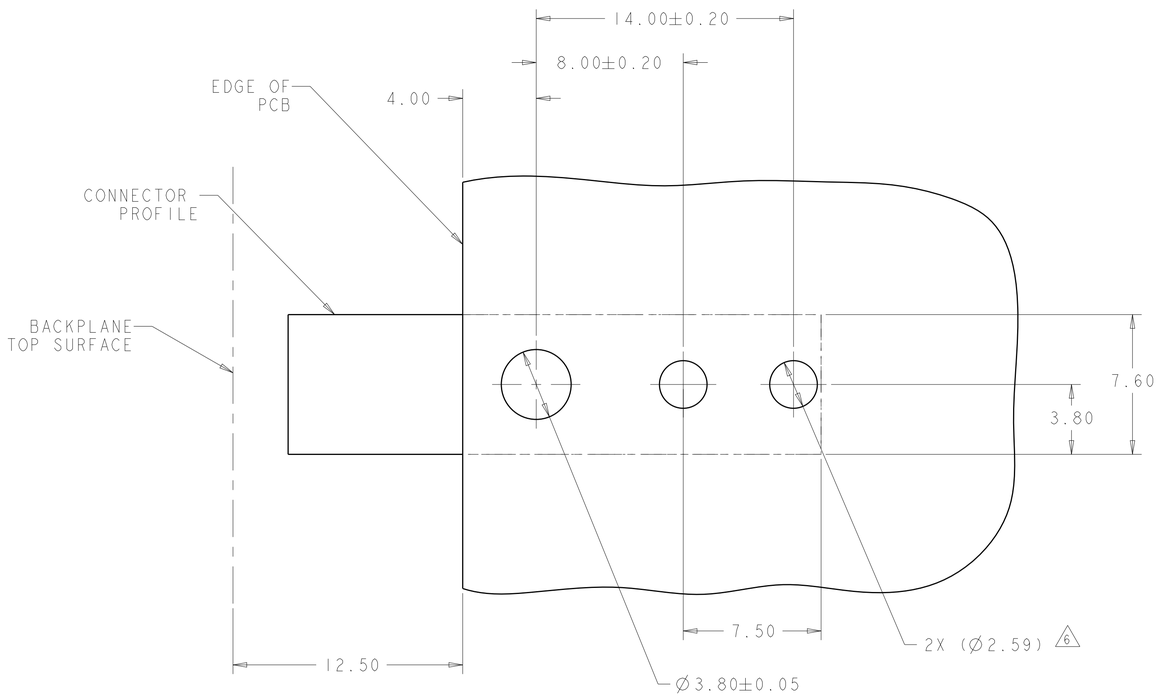

RECOMMENDED PRINTED CIRCUIT BOARD LAYOUT

(AS VIEWED FROM COMPONENT SIDE)
MINIMUM PCB THICKNESS 1.57 3

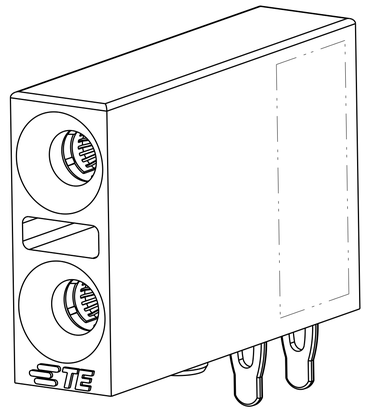

ISOMETRIC FRONT VIEW

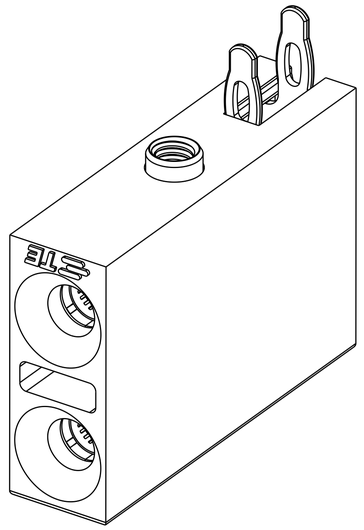

ISOMETRIC BOTTOM VIEW

P/N: 2085181-1

THIS DRAWING IS A CONTROLLED DOCUMENT.

DIMENSIONS: mm

TOLERANCES UNLESS OTHERWISE SPECIFIED:
0 PLC ±-
1 PLC ±0.5
2 PLC ±0.35
3 PLC ±-
4 PLC ±-
ANGLES ±1°

MATERIAL 1

FINISH 2

DWN G.PETERS 10MAR2009
CHK D.DEFIBAUGH 10MAR2009
APVD D.DEFIBAUGH 10MAR2009

PRODUCT SPEC -
APPLICATION SPEC -
WEIGHT -

TE Connectivity

NAME 2 POSITION, RIGHT ANGLE, 3.17mm DIAMETER, SOCKET ASSEMBLY

SIZE A1 | CAGE CODE 00779 | DRAWING NO C-2085181 | RESTRICTED TO -

CUSTOMER DRAWING | SCALE 1:1 | SHEET 2 OF 2 | REV D

4805 (3/13)