© 2024 TE Connectivity. All Rights Reserved.

REVISIONS						
PART REV.	P	LTR	DESCRIPTION	DATE	DWN	APVD
02		03	WO 97/3778	13MAY1997	rvh	rvh
03		03a	ueberarbeitet	24OCT2000	Abr	Zitz
03		A	New drawing created.	12AUG2010	Kirsch.	Zitz
03		A1	OBSOLETED VARIANT 1-1393434-4	09MAY2024	KMD	SCK

DESING A
Ausfuehrung A

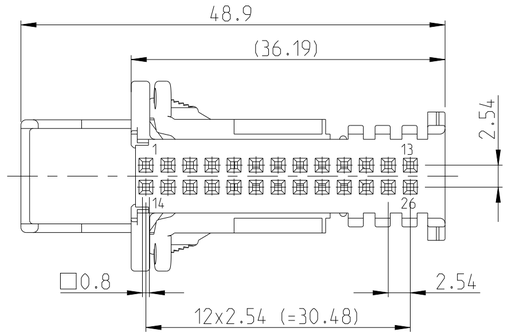

ASSEMBLY POSITION
Montagezustand

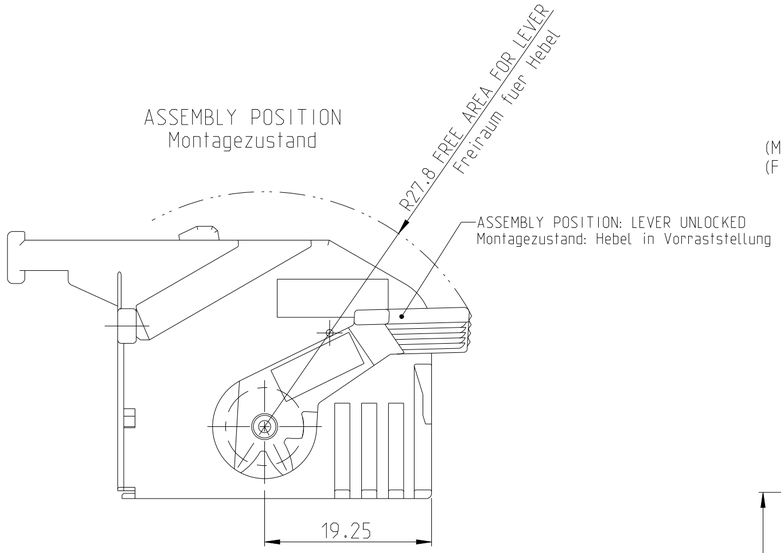

DESIGN B
Ausfuehrung B

(MISSING DIMENSIONS SEE DESIGN A)
(Fehlende Masse siehe Ausfuehrung A)

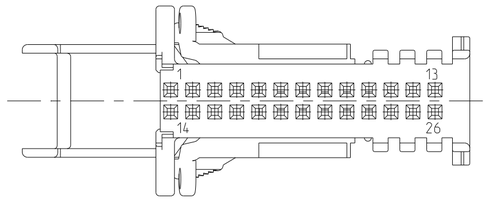

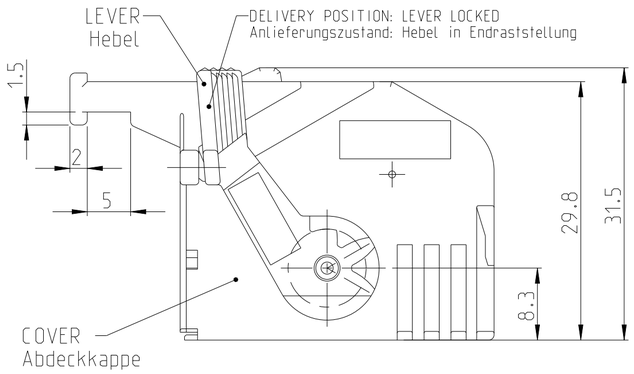

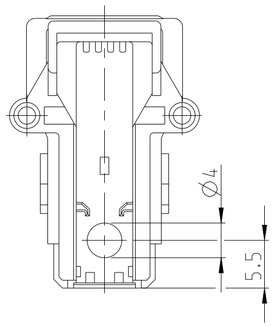

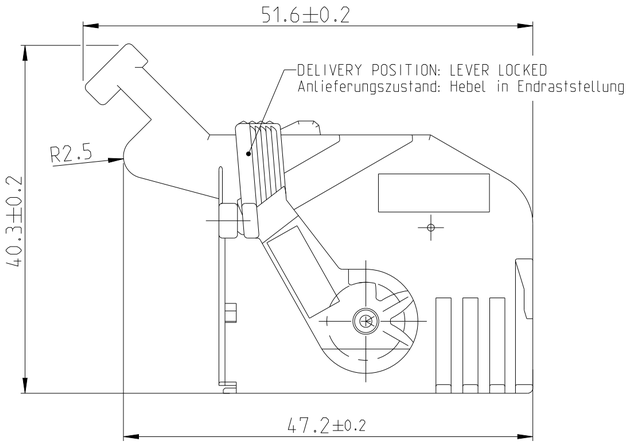

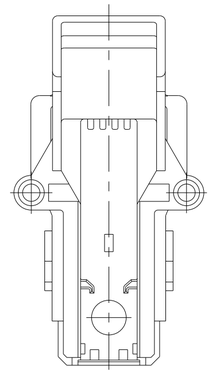

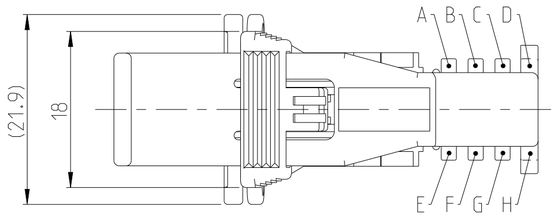

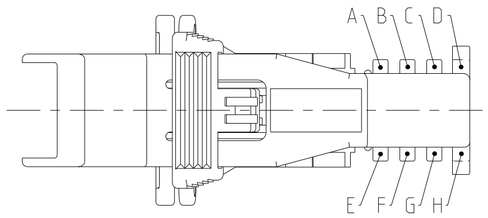

NOTES:
Bemerkungen:

1 DRAWN WITH ALL CODINGS
gezeichnet mit allen Kodierungen

2 PART-NO. ACCORDING TO LETTERING DIN 1451
Teile-Nr. nach Mittelschrift DIN 1451

3 SUITABLE TO PIN STRIP:
V23540-M1126-B5** (PN 4-1393375-3 TO -9 AND PN 5-1393375-0)
V23540-M1626-D5** (PN 5-1393375-3/*-5/*-7/*-8 AND 6-1393375-0/*-2 TO -5)
V23540-M1626-F5** (PN 6-1393375-7/*-8 AND 7-1393375-0/*-1/*-3/*-5 TO *-9)
V23540-M1026-Y1 (PN 4-1393476-3 / 5-1393476-0/*-1)

4 SUITABLE SOCKET HOUSING:
V23540-M1026-Q50* (PN 0-1393374-2)

5 COVER: PBT-GF30; COLOUR: SEE TABLE
Kappe: PBT-GF30; Farbe: siehe Tabelle
LEVER: PBT-GF20; COLOUR: TURQUOISE BLUE
Hebel: PBT-GF20; Farbe: tuerkisblau

SE-ORDER-NO.	TE-ORDER-NO.	SE-ORDER-NO.	TE-ORDER-NO.	GEOMETRIC	COLOUR
V23540-M1026-S509	-	V23540-M1026-Y209	-	D - E	TURQUOISE BLUE
V23540-M1026-S508	-	V23540-M1026-Y208	-	A - H	ORANGE
V23540-M1026-S507	-	V23540-M1026-Y207	-	D - F	LILAC
V23540-M1026-S506	-	V23540-M1026-Y206	-	B - H	GREY
V23540-M1026-S505	-	V23540-M1026-Y205	2-1393434-2	D - G	BROWN
V23540-M1026-S504	1-1393434-6	V23540-M1026-Y204	2-1393434-1	C - H	GREEN
V23540-M1026-S503	1-1393434-5	V23540-M1026-Y203	2-1393434-0	A - E	YELLOW
~~V23540-M1026-S502~~	~~1-1393434-4~~	~~V23540-M1026-Y202~~	~~1-1393434-9~~	B - F	SIGNAL BLUE
V23540-M1026-S501	1-1393434-3	V23540-M1026-Y201	1-1393434-8	C - G	BEIGE
V23540-M1026-S500	1-1393434-2	V23540-M1026-Y200	1-1393434-7	D - H	BLACK
DESIGN A WITH CABLE OUTLET 90°		DESIGN B WITH CABLE OUTLET 45°		CODING	

REPLACEMENT FOR SE-DRAWING
V23540-M1026-S500-*-27
Ersatz fuer SE-Zeichnung
V23540-M1026-S500-*-27

ISO 8015
DIN 16901-130
DIN ISO 2768-mH

THIS DRAWING IS A CONTROLLED DOCUMENT.

DIMENSIONS: mm

TOLERANCES UNLESS OTHERWISE SPECIFIED:
0 PLC ±
1 PLC ±
2 PLC ±
3 PLC ±
4 PLC ±
ANGLES ±

MATERIAL: material_2
FINISH: - finish_spec_2

DWN V. Houdenhove 16SEP1992
CHK EC B EA 16SEP1992
APVD EC B EA 16SEP1992
PRODUCT SPEC -
APPLICATION SPEC -
WEIGHT -

TE Connectivity

NAME
26POS. COVER WITH LEVER
26pol. Abdeckkappe mit Hebel

SIZE	CAGE CODE	DRAWING NO	RESTRICTED TO
A2	00779	C-1393434	-

CUSTOMER DRAWING | SCALE 2:1 | SHEET 1 OF 1 | REV A1

1471-9 (3/13)