THIS DRAWING IS UNPUBLISHED
VERTRAULICHE UNVEROEFFENTLICHTE ZEICHNUNG
© COPYRIGHT 2015 BY TE Connectivity Germany GmbH
RELEASED FOR PUBLICATION 2015
FREI FUER VEROEFFENTLICHUNG
ALL RIGHTS RESERVED.
ALLE RECHTE VORBEHALTEN.

MATED WITH:
PASSEND ZU:
-

PROJEKT NR.: EGGMN07401

REVISIONS
AENDERUNGEN

P	LTR	DESCRIPTION BESCHREIBUNG	DATE	DWN	APVD
	F1	NEW DRAWING	25NOV2015	ER	DO
	F2	REV. PER ECR-16-000458	12JAN2016	ER	DO
	F3	LASER PRINTING ADDED PER PCN E-16-013596	28SEP2016	ER	DO
	F4	PRINT (PARTIAL) MOVED TO ASSY (PCN E-17-007296)	02JUN2017	ER	DO

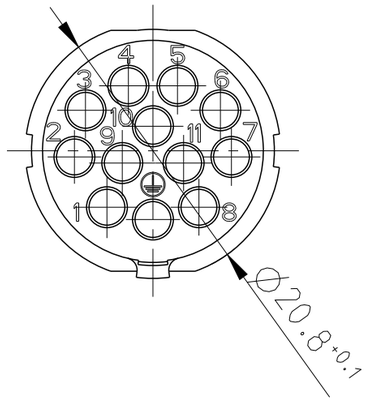

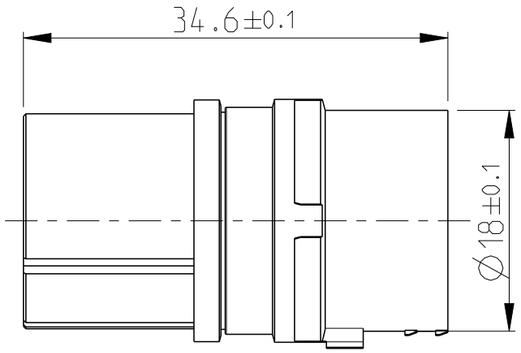

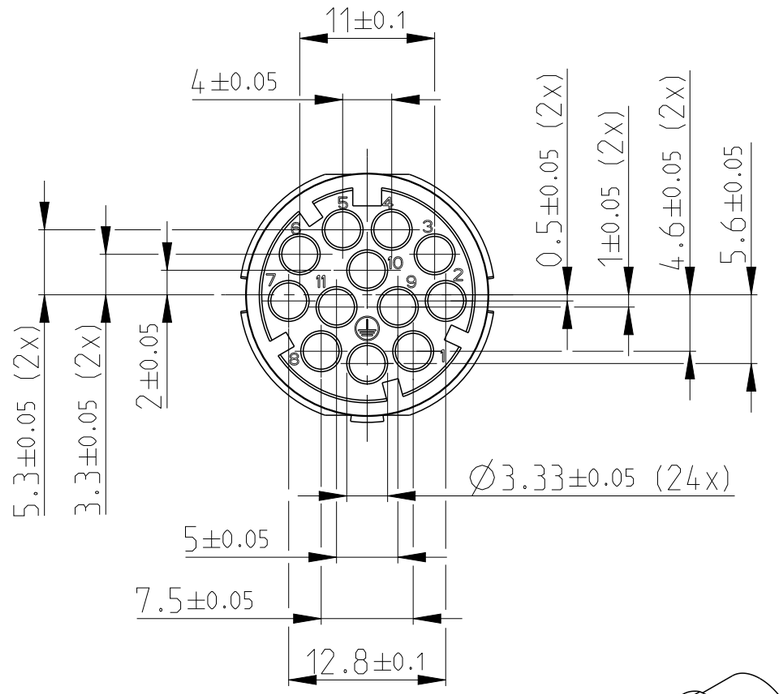

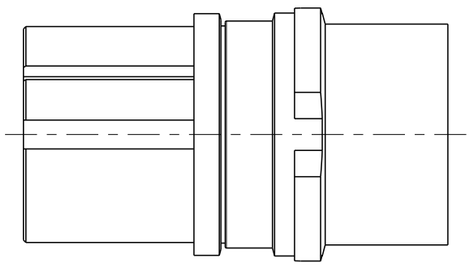

SCALE 1:1

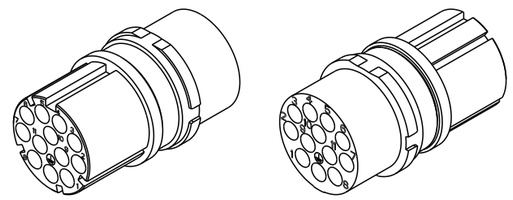

-1 AS SHOWN
-1 WIE GEZEICHNET

1 MATERIAL: PBT-GF10
COLOR: GREY

THIS DRAWING IS A CONTROLLED DOCUMENT.
DIMENSIONING AND TOLERANCING PER GPS (ISO STANDARDS).

DIMENSIONS: MASSEINHEITEN: mm

TOLERANCES UNLESS OTHERWISE SPECIFIED: ALLGEMEINTOLERANZEN
0 PLC ±-
1 PLC ±-
2 PLC ±-
3 PLC ±-
4 PLC ±-
ANGLES/WINKEL ±1°

MATERIAL: 1

FINISH/OBERFLAECHE/FARBE
-
-

DWN E.REISS 25NOV2015
CHK D.ONDREJ 25NOV2015
APVD D.ONDREJ 25NOV2015
PRODUCT SPEC PRODUKTSPEZ. 108-94485
APPLICATION SPEC VERARBEITUNGSSPEZ. 114-94369
WEIGHT GEWICHT 8.18g

TE Connectivity

NAME
FEMALE INSERT
SERIES HC26, 12-POS., TYPE III+
-

SIZE	CAGE CODE	DRAWING NO ZEICHNUNGS-NR.	RESTRICTED TO NUR FUER
A3	00779	C-1245615	-

CUSTOMER DRAWING /KUNDENZEICHNUNG
SCALE MASSSTAB 2:1 SHEET BLATT 1 OF VON 1 REV F4

1470-19 (3/13)