THIS DRAWING IS UNPUBLISHED. RELEASED FOR PUBLICATION -,- .
© COPYRIGHT - By - ALL RIGHTS RESERVED.

LOC	DIST
—	—

REVISIONS

P	LTR	DESCRIPTION	DATE	DWN	APVD
	C	REV PER ECO-12-018918	15NOV12	PY	DW

COMPONENT	MATERIAL	FINISH
HOUSING CAP COUPLING NUT	STAINLESS STEEL PER ASTM-A484 AND ASTM-A582, TYPE 303	PASSIVATE PER QQ-P-35
DIELECTRIC	TFE FLUOROCARBON PER ASTM-D-1457	N/A
CENTER CONTACT	BRASS PER ASTM-B-16 HALF HARD	GOLD PLATE PER MIL-G-45204
RETAINING RING	BERYLLIUM COPPER PER ASTM-B-194, ALLOY C17200, CONDITION H	N/A
GASKET	SILICONE RUBBER PER ZZ-R-765	N/A
FERRULE	COPPER OR BRASS ALLOY ROCKWELL F65 MAXIMUM	GOLD PLATE PER MIL-G-45204

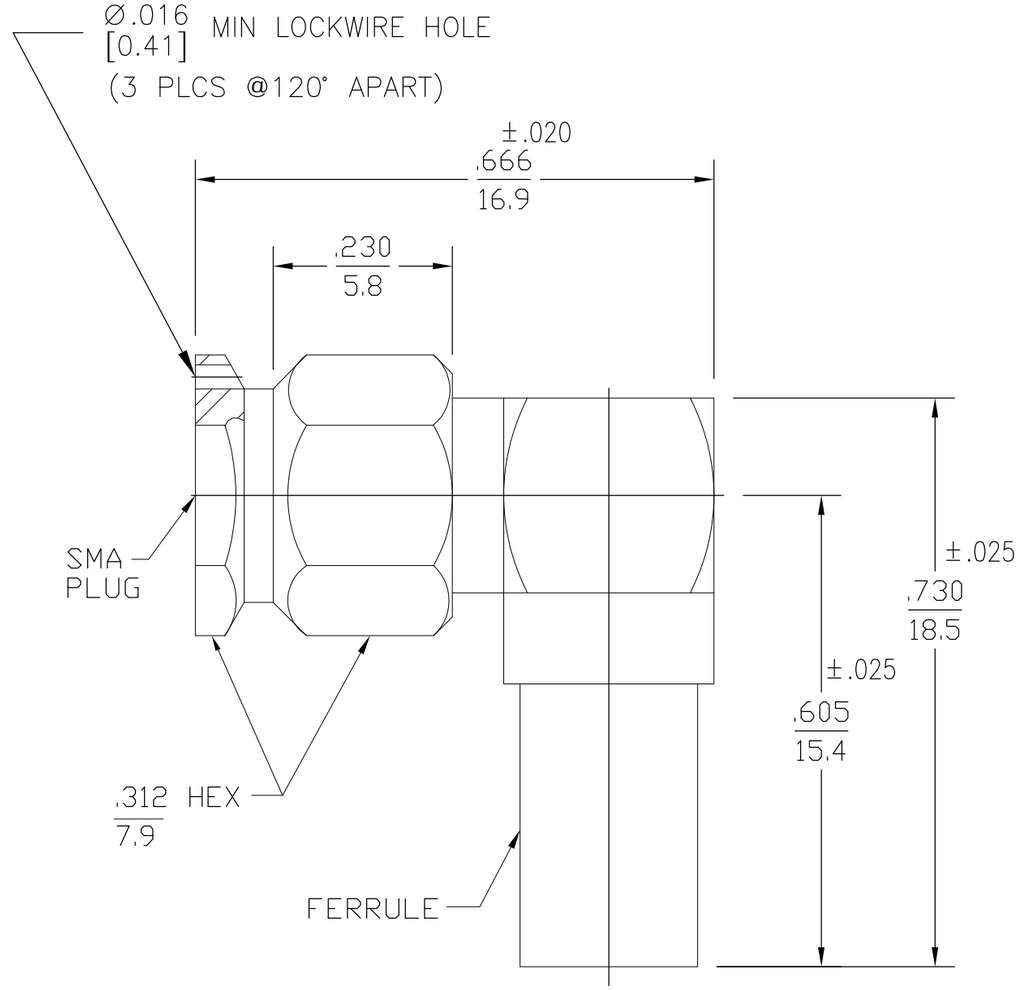

1. CAPTURED CENTER CONTACT

DESIGNED FOR USE WITH RG-174, 316/U	
CABLE ENTRY DIAMETER MINIMUM	
SLEEVE	.125
HOUSING	.066
CONTACT	.041 SLOT

1052157-1

PART NO.

THIS DRAWING IS A CONTROLLED DOCUMENT.

DIMENSIONS: INCHES

TOLERANCES UNLESS OTHERWISE SPECIFIED:

0 PLC	± -
1 PLC	± -
2 PLC	± -
3 PLC	± .005 [0.13]
4 PLC	± -
ANGLES	± 1°

MATERIAL: SEE TABLE

FINISH: SEE TABLE

DWN P. YEAGER 05JUN2007
CHK D. WILSON 07JUN07
APVD D. WILSON 07JUN07
PRODUCT SPEC —
APPLICATION SPEC —
WEIGHT —

TE Connectivity

NAME: SMA RIGHT ANGLE CABLE PLUG SOLDER ATTACHMENT M39012/56-3012 CAT B

SIZE	CAGE CODE	DRAWING NO	RESTRICTED TO
A3	00779	C-1052157	—

CUSTOMER DRAWING

SCALE	SHEET	REV
5:1	1 OF 1	C